YAMAHA

XJR1300(L) '99

5EA3-AE1

SERVICE MANUAL

EAS00000

XJR1300(L) ’99
SERVICE MANUAL
© 1998 by Yamaha Motor Co., Ltd.
1st Edition, August 1998
All rights reserved. Any reprinting or unauthorized use without the written permission of Yamaha Motor Co., Ltd. is expressly prohibited.

EAS00002

NOTICE

This manual was written by the Yamaha Motor Company primarily for use by Yamaha dealers and their qualified mechanics. It is not possible to put an entire mechanic's education into one manual, so it is assumed that persons using this book to perform maintenance and repairs on Yamaha motorcycle has a basic understanding of the mechanical concepts and procedures inherent in motorcycle repair technology. Without such knowledge, attempted repairs or service to this model may render it unfit to use and/or unsafe.

Yamaha Motor Cmpany, Ltd. is continually striving to improve all models manufactured by Yamaha. Modifications and significant changes in specifications or procedures will be forwarded to all Authorized yamaha dealers and will, where applicable, appear in future editions of this manual.

NOTE:

PARTICURARLY IMPORTANT INFORMATION
This materials distinguished by the following notation.

⚠ The Safety Alert Symbol means ATTENTION! BECOME ALERT! YOUR SAFETY IS INVOLVED!

⚠ WARNING Failure to follow WARNING instructions could result in severe injury or death to the motorcycle operator, a bystander or a person checking or repairing the motorcycle.

CAUTION: A CAUTION indicates special precautions that must be taken to avoid damage to the motorcycle.

NOTE: A NOTE provides key information to make procedures easier or clearer.

EAS00007

HOW TO USE THIS MANUAL

This manual is intended as a handy, easy-to-read reference book for the mechanic. Comprehensive explanations of all installation, removal, disassembly, assembly, repair and check procedures are laid out with the individual steps in sequential order.

① The manual is divided into chapters. An abbreviation and symbol in the upper right corner of each page indicate the current chapter.
Refer to “SYMBOLS”.

② Each chapter is divided into sections. The current section title is shown at the top of each page, except in Chapter 3 (“PERIODIC CHECKS AND ADJUSTMENTS”), where the sub-section title(-s) appears.

③ Sub-section titles appear in smaller print than the section title.

④ To help identify parts and clarify procedure steps, there are exploded diagrams at the start of each removal and disassembly section.

⑤ Numbers are given in the order of the jobs in the exploded diagram. A circled number indicates a disassembly step.

⑥ Symbols indicate parts to be lubricated or replaced.
Refer to “SYMBOLS”.

⑦ A job instruction chart accompanies the exploded diagram, providing the order of jobs, names of parts, notes in jobs, etc.

⑧ Jobs requiring more information (such as special tools and technical data) are described sequentially.

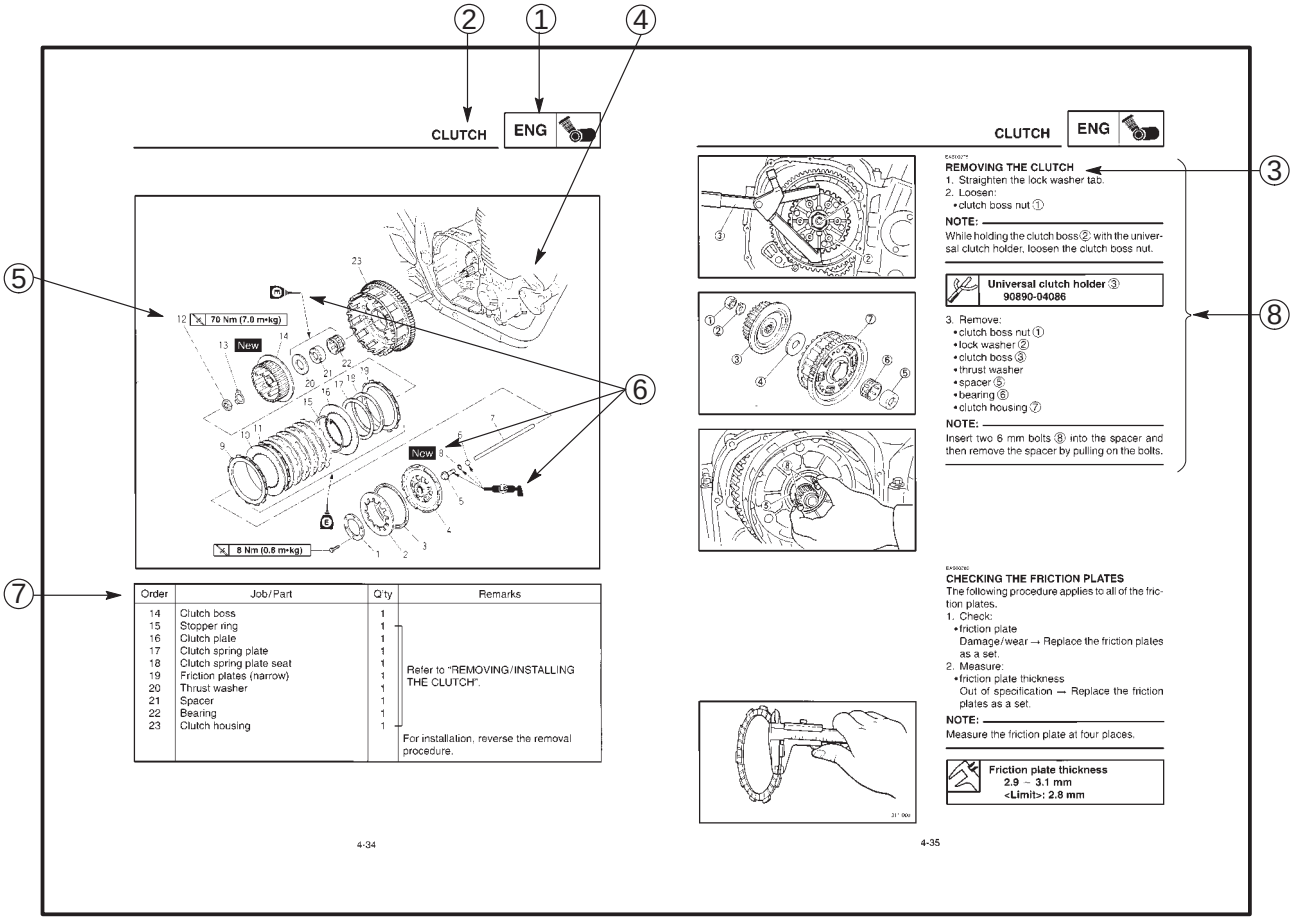

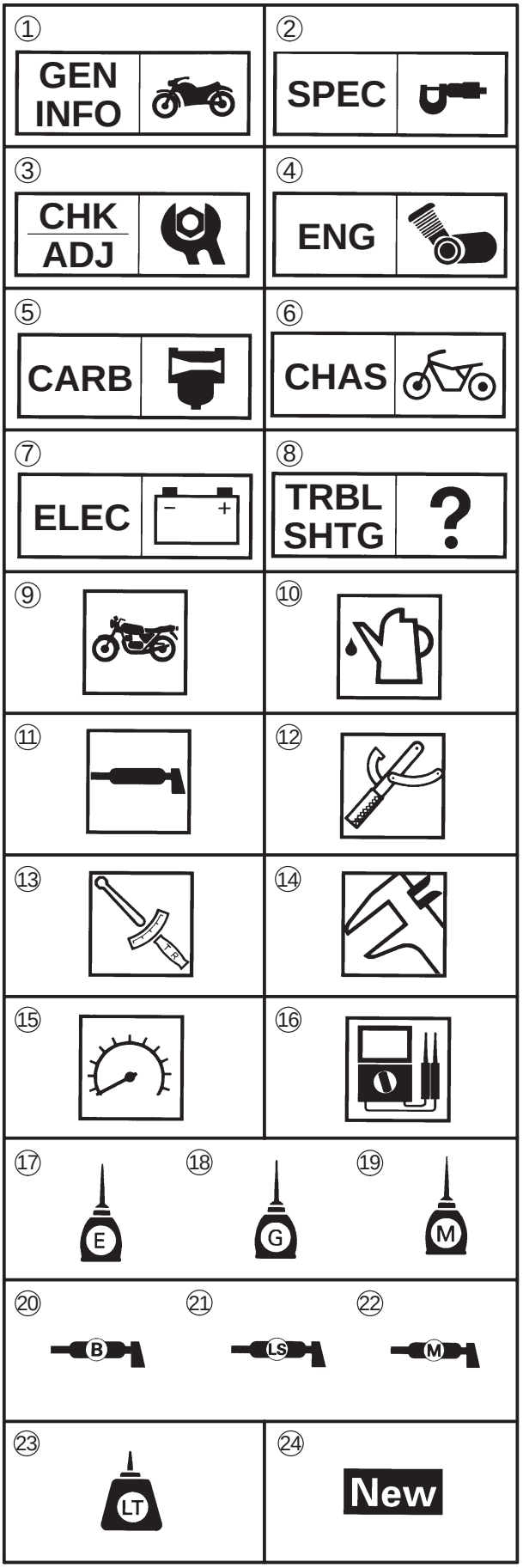

EAS00009

SYMBOLS

The following symbols are not relevant to every vehicle.

Symbols ① to ⑧ indicate the subject of each chapter.

① General information
② Specifications
③ Periodic checks and adjustments
④ Engine
⑤ Carburetor(-s)
⑥ Chassis
⑦ Electrical system
⑧ Troubleshooting

Symbols ⑨ to ⑯ indicate the following.

⑨ Serviceable with engine mounted
⑩ Filling fluid
⑪ Lubricant
⑫ Special tool
⑬ Tightening torque
⑭ Wear limit, clearance
⑮ Engine speed
⑯ Electrical data

Symbols ⑰ to ㉒ in the exploded diagrams indicate the types of lubricants and lubrication points.

⑰ Engine oil
⑱ Gear oil
⑲ Molybdenum disulfide oil
⑳ Wheel bearing grease
㉑ Lithium soap base grease
㉒ Molybdenum disulfide grease

Symbols ㉓ to ㉔ in the exploded diagrams indicate the following:

㉓ Apply locking agent (LOCTITE®)
㉔ Replace the part

EAS00013

INDEX

GENERAL INFORMATION	GEN INFO 1
SPECIFICATIONS	SPEC 2
PERIODIC INSPECTION AND ADJUSTMENTS	CHK ADJ 3
ENGINE OVERHAUL	ENG 4
CARBURETORS	CARB 5
CHASSIS	CHAS 6
ELECTRICAL	ELEC 7
TROUBLESHOOTING	TRBL SHTG 8

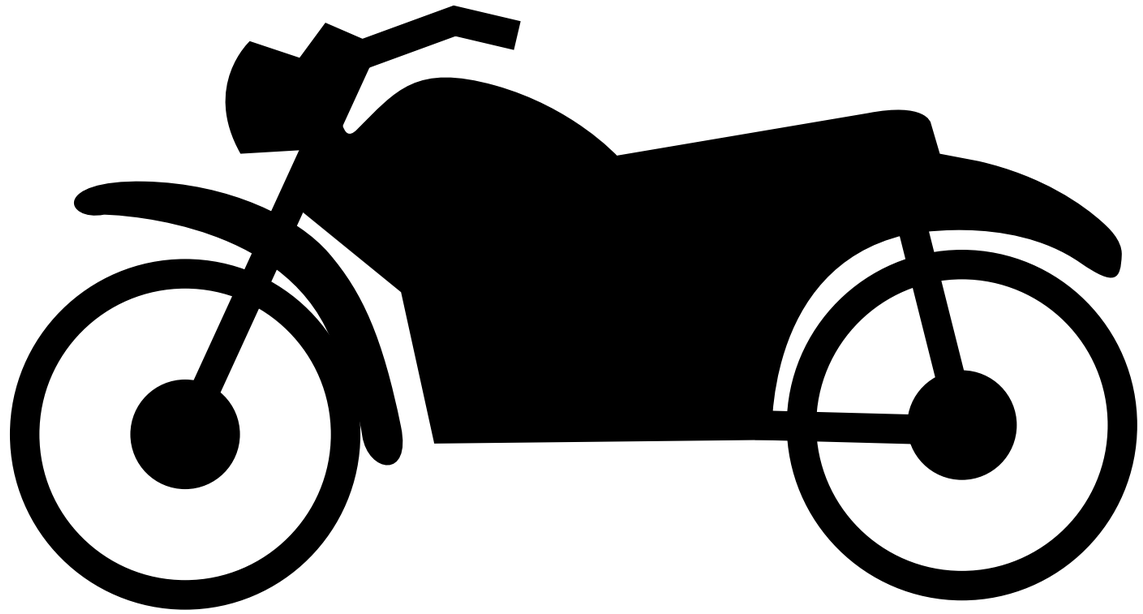

GEN INFO

1

CHAPTER 1.
GENERAL INFORMATION

MOTORCYCLE IDENTIFICATION 1-1
VEHICLE IDENTIFICATION NUMBER 1-1
MODEL CODE 1-1

IMPORTANT INFORMATION 1-2
PREPARATION FOR REMOVAL AND DISASSEMBLY 1-2
REPLACEMENT PARTS 1-2
GASKETS, OIL SEALS AND O-RINGS 1-2
LOCK WASHERS/PLATES AND COTTER PINS 1-3
BEARINGS AND OIL SEALS 1-3
CIRCLIPS 1-3

CHECKING OF THE CONNECTIONS 1-4

SPECIAL TOOLS 1-5

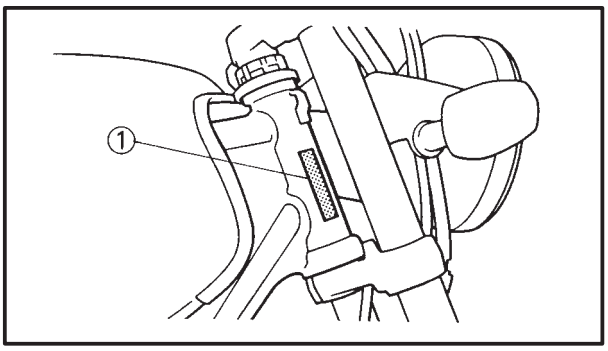

EAS00014

GENERAL INFORMATION

MOTORCYCLE IDENTIFICATION

EAS00017

VEHICLE IDENTIFICATION NUMBER (For E)

The vehicle identification number ① is stamped into the right side of the steering head.

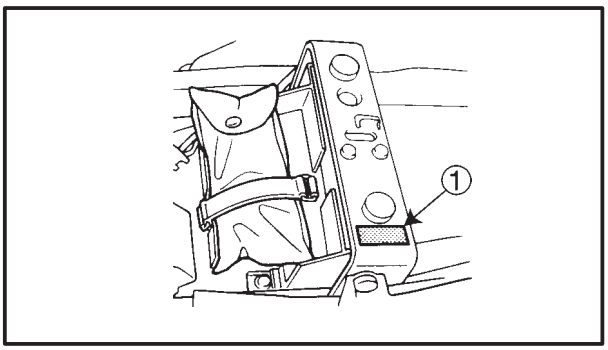

EAS00018

MODEL CODE

The model code label ① is affixed to the frame. This information will be needed to order spare parts.

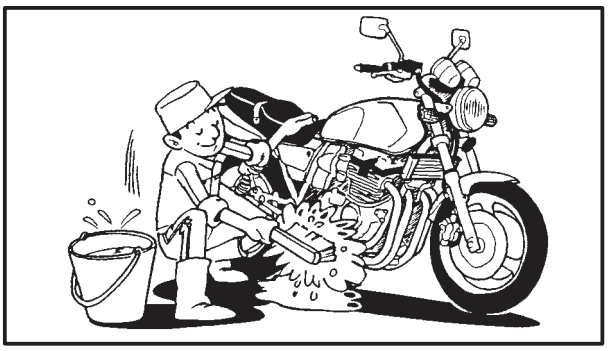

EAS00020

IMPORTANT INFORMATION

PREPARATION FOR REMOVAL AND DISASSEMBLY

1. Before removal and disassembly, remove all dirt, mud, dust, and foreign material.

2. Use only the proper tools and cleaning equipment.
   Refer to “SPECIAL TOOLS”.
3. When disassembling, always keep mated parts together. This includes gears, cylinders, pistons and other parts that have been “mated” through normal wear. Mated parts must always be reused or replaced as an assembly.
4. During disassembly, clean all of the parts and place them in trays in the order of disassembly. This will speed up assembly and allow for the correct installation of all parts.
5. Keep all parts away from any source of fire.

EAS00021

REPLACEMENT PARTS

Use only genuine Yamaha parts for all replacements. Use oil and grease recommended by Yamaha for all lubrication jobs. Other brands may be similar in function and appearance, but inferior in quality.

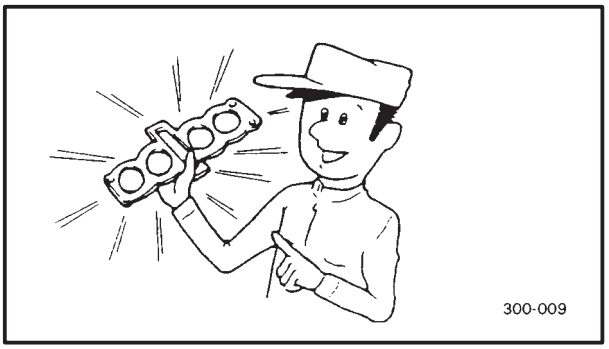

EAS00022

GASKETS, OIL SEALS AND O-RINGS

1. When overhauling the engine, replace all gaskets, seals and O-rings. All gasket surfaces, oil seal lips and O-rings must be cleaned.
2. During reassembly, properly oil all mating parts and bearings and lubricate the oil seal lips with grease.

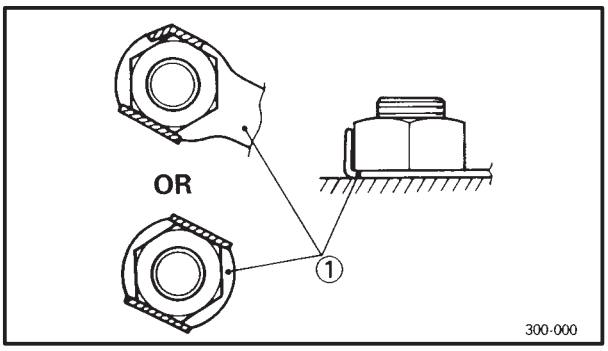

EAS00023

LOCK WASHERS/PLATES AND COTTER PINS

After removal, replace all lock washers/plates ① and cotter pins. After the bolt or nut has been tightened to specification, bend the lock washer tabs and the cotter pin ends along a flat of the bolt or nut.

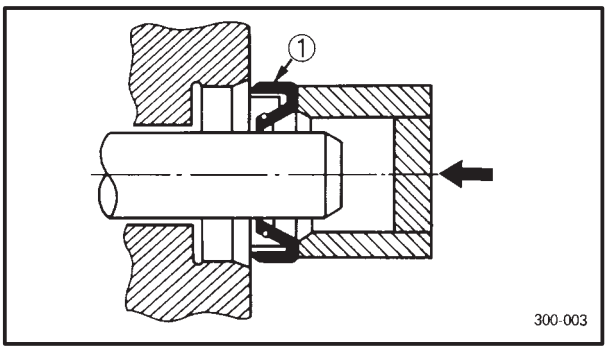

EAS00024

BEARINGS AND OIL SEALS

1. Install bearings and oil seals so that the manufacturer's marks or numbers are visible. When installing oil seals, lubricate the oil seal lips with a light coat of lithium soap base grease. Oil bearings liberally when installing, if appropriate.

① Oil seal

CAUTION:

Do not spin the bearing with compressed air because this will damage the bearing surfaces.

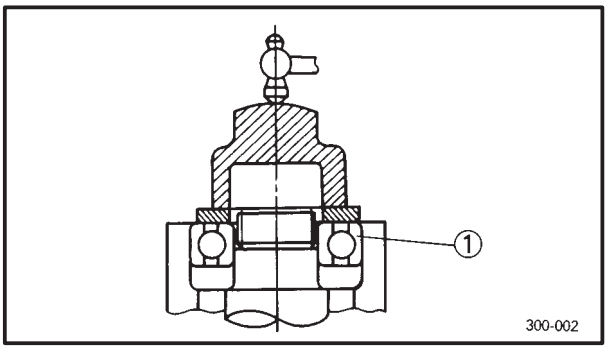

① Bearing

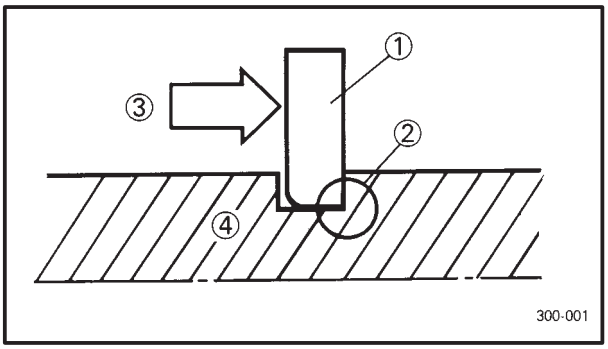

EAS00025

CIRCLIPS

Before reassembly, check all circlips carefully and replace damaged or distorted circlips. Always replace piston pin clips after one use. When installing a circlip ①, make sure that the sharp-edged corner ② is positioned opposite the thrust ③ that the circlip receives.

④ Shaft

EAS00026

CHECKING THE CONNECTIONS

Check the leads, couplers, and connectors for stains, rust, moisture, etc.

1. Disconnect:
   - lead
   - coupler
   - connector

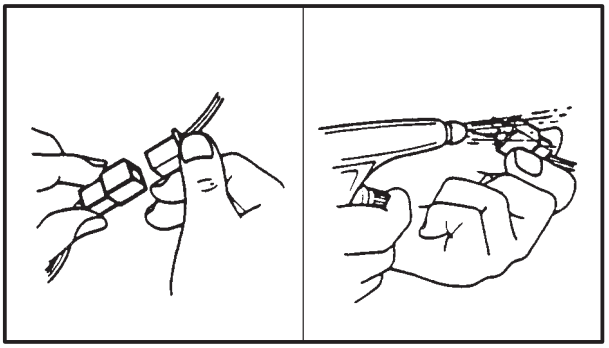

2. Check:
   - lead
   - coupler
   - connector

   Moisture → Dry with an air blower.
   Rust/stains → Connect and disconnect several times.

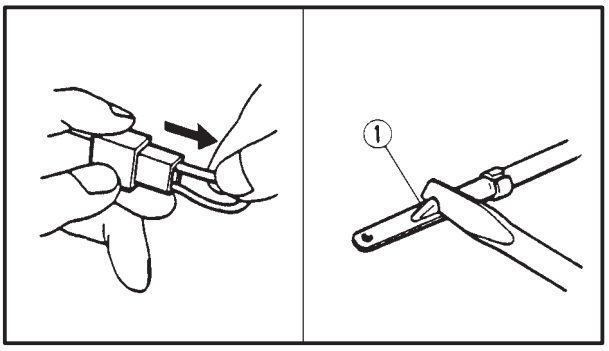

3. Check:
   - all connections

   Loose connection → Connect properly.

NOTE:

If the pin ① on the terminal is flattened, bend it up.

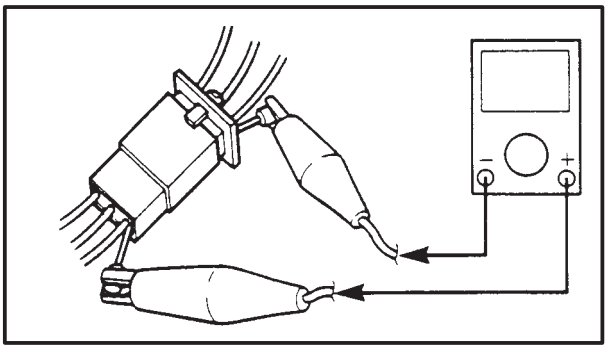

4. Connect:
   - lead
   - coupler
   - connector

NOTE:

Make sure that all connections are tight.

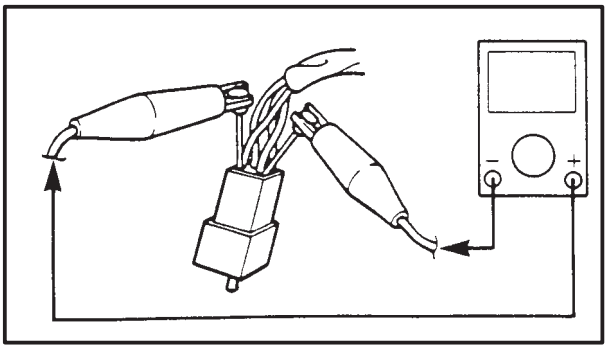

5. Check:
   - continuity
   (with a pocket tester)

	Pocket tester **90890-03112**

NOTE:

- If there is no continuity, clean the terminals.
- When checking the wire harness, perform steps (1) to (3).
- As a quick remedy, use a contact revitalizer available at most part stores.

EB104000

SPECIAL TOOLS

The following special tools are necessary for complete and accurate tune-up and assembly.
Use only the appropriate special tools as this will help prevent damage caused by the use of inappropriate tools or improvised techniques.
When placing an order, refer to the list provided below to avoid any mistakes.

Tool No.	Tool name/Function	Illustration
90890-01268 90890-01403	Exhaust & steering nut wrench Ring nut wrench This tools are used to loosen and tighten the steering ring nut.	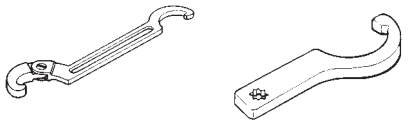
90890-01304	Piston pin puller This tool is used to remove the piston pins.	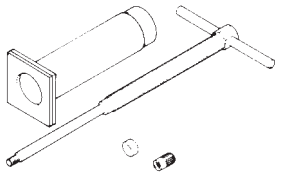
90890-01312	Fuel level gauge This tool is used to measure the fuel level in the float chamber.	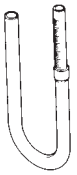
90890-01367 90890-01374	Fork seal driver weight Fork seal driver attachment (ø43) These tools are used when installing the fork seal.	
90890-01326 90890-01327	T-handle Damper rod holder These tools are used to hold the damper rod assembly when loosening or tightening the damper rod assembly bolt.	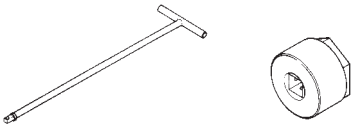
90890-03081 90890-04082	Compression gauge Adapter These tools are used to measure engine compression.	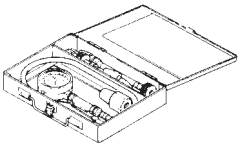
90890-03094	Vacuum gauge This guide is used to synchronize the carburetors.	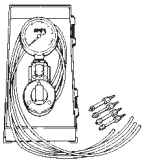
90890-03112	Pocket tester This tool is used to check the electrical system.	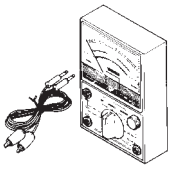

Tool No.	Tool name/Function	Illustration
90890-03113	Engine tachometer This tool is used to check engine speed.	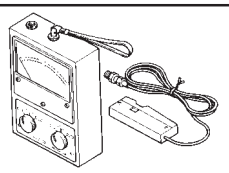
90890-03141	Timing light This tool is used to check the ignition timing.	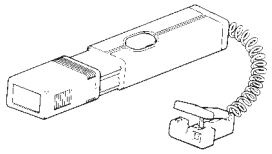
90890-03158	Carburetor angle driver This tool is used to turn the pilot screw when adjusting the engine idling speed.	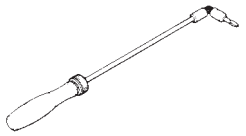
90890-04016	Valve guide reamer, remover and installer (5.5 mm) These tools are used to rebore, remove and install the valve guide.	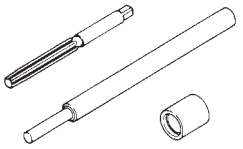
90890-04019	Valve spring compressor This tool is used to remove or install the valve assemblies.	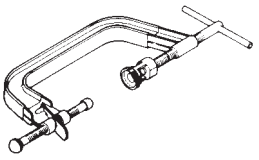
90890-03153 90890-03124	Oil pressure gauge Oil pressure adaptor B These tools are used to measure the engine oil pressure.	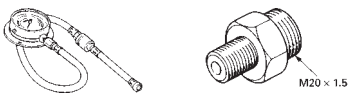
90890-04086	Clutch holding tool This tool is used to hold the clutch boss when removing or installing the clutch boss nut.	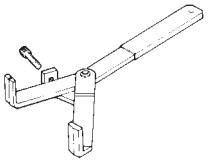
90890-04101	Valve lapper This tool is used for removing and installing the valve lifter and for lapping the valve.	
90890-04110	Tappet adjusting tool This tool is necessary to replace valve adjusting pads.	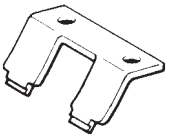

Tool No.	Tool name/Function	Illustration
90890-06754	Ignition checker This tool is used to check the ignition system components.	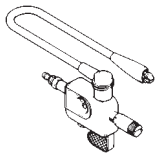
90890-85505	Yamaha bond No. 1215 This bond is used to seal two mating surfaces (e.g., crankcase mating surfaces).	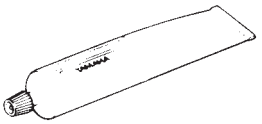

SPEC 2

CHAPTER 2.
SPECIFICATIONS

GENERAL SPECIFICATIONS 2-1

MAINTENANCE SPECIFICATIONS 2-4
ENGINE 2-4
CHASSIS 2-14
ELECTRICAL 2-18

CONVERSION TABLE 2-20

GENERAL TIGHTENING TORQUES 2-20

LUBRICATION POINT AND GRADE OF LUBRICANT 2-21
ENGINE 2-21
CHASSIS 2-22

LUBRICATION DIAGRAMS 2-23

CABLE ROUTING 2-26

SPECIFICATIONS

GENERAL SPECIFICATIONS

Model	XJR1300(L)
Model code:	5EA2/5EA3/5EA4
Dimensions: Overall length Overall width Overall height Seat height Wheelbase Minimum ground clearance Minimum turning radius	 2175 mm (GB) (D) (NL) (B) (F) (E) (P) (I) (GR) (SF) (AUS) 2250 mm (N) (SF) (G) (A) 775 mm 1115 mm 775 mm 1500 mm 120 mm 2800 mm
Basic weight: With oil and full fuel tank	 253 kg
Engine: Engine type Cylinder arrangement Displacement Bore × stroke Compression ratio Compression pressure (STD) Starting system Lubrication system:	 Air-cooled 4-stroke, DOHC Forward-inclined parallel 4-cylinder 1250 cm^3 79.0 × 63.8 mm 9.7: 1 1050 kPa (10.5 kg/cm^2,10.5 bar) at 400 r/min Electric starter Wet sump
Oil type or grade: Engine oil 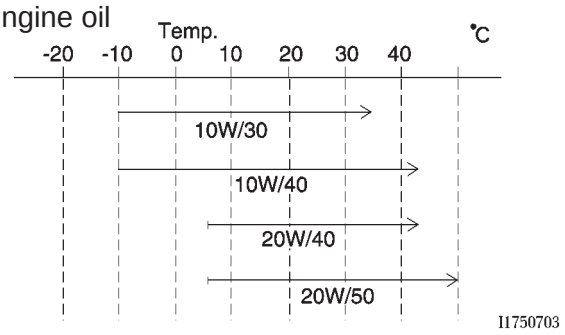 Engine oil Periodic oil change With oil filter replacement Total amount Oil cooler capacity (including all routes)	SE or higher grade 3.0 L 3.35 L 4.2 L 0.2 L
Air filter:	Dry type element
Fuel: Type Fuel tank capacity Fuel reserve amount	 Regular unleaded gasoline 21 L 4.5 L

Model	XJR1300(L)
Carburetor:	
Type/quantity	BS36/4
Manufacturer	MIKUNI
Spark plug:	
Type × quantity	DPR8EA-9/X24EPR-U9 × 4
Manufacturer	NGK/DENSO
Spark plug gap	0.8 ~ 0.9 mm
Clutch type:	Wet, multiple-disc
Transmission:	
Primary reduction system	Spur gear
Primary reduction ratio	98/56 (1.750)
Secondary reduction system	Chain drive
Secondary reduction ratio	38/17 (2.235)
Transmission type	Constant mesh 5-speed
Operation	Left foot operation
Gear ratio 1st	40/14 (2.857)
2nd	36/18 (2.000)
3rd	33/21 (1.571)
4th	31/24 (1.292)
5th	29/26 (1.115)
Chassis:	
Frame type	Double cradle
Caster angle	25.5°
Trail	100 mm
Tire:	
Type	Tubeless
Size front	120/70ZR17 (58W)
rear	180/55ZR17 (73W)
Manufacturer front	MICHELIN/DUNLOP/BRIDGESTONE
rear	MICHELIN/DUNLOP/BRIDGESTONE
Type front	MACADAM 90X/D207F/BT57F
rear	MACADAM 90X/D207/BT57R
Tire pressure (cold tire):	
Maximum load-except motorcycle	207 kg
Loading condition A *	0 ~ 90 kg
front	250 kPa (2.5 kg/cm^2, 2.5 bar)
rear	250 kPa (2.5 kg/cm^2, 2.5 bar)
Loading condition B *	90 ~ 207 kg
front	250 kPa (2.5 kg/cm^2, 2.5 bar)
rear	290 kPa (2.9 kg/cm^2, 2.9 bar)
High-speed riding	
front	250 kPa (2.5 kg/cm^2, 2.5 bar)
rear	290 kPa (2.9 kg/cm^2, 2.9 bar)

*Load is the total weight of cargo, rider, passenger, and accessories.

Model	XJR1300(L)
Brake:	
Front brake type	Dual disc brake
operation	Right hand operation
Rear brake type	Single disc brake
operation	Right foot operation
Suspension:	
Front suspension	Telescopic fork
Rear suspension	Swingarm
Shock absorber:	
Front shock absorber	Coil spring/Oil Damper
Rear shock absorber	Coil spring/Gas-oil damper
Wheel travel:	
Front wheel travel	130 mm
Rear wheel travel	110 mm
Electrical:	
Ignition system	T.C.I. (Digital)
Generator system	A.C. generator
Battery type	GT14B-4
Battery capacity	12 V 12AH
Headlight type:	Halogen bulb
Bulb wattage × quantity:	
Headlight	12 V 60 W/55 W × 1
Auxiliary light	12 V 4 W × 1
Tail/brake light	12 V 5 W/21 W × 2
Flasher light	12 V 21 W × 4
Meter light	12 V 1.7 W × 4
Neutral indicator light	12 V 1.7 W × 1
High beam indicator light	12 V 3.4 W × 1
Oil level indicator light	12 V 1.7 W × 1
Turn indicator light	12 V 1.7 W × 2

MAINTENANCE SPECIFICATIONS

ENGINE

Model	Standard	Limit
Cylinder head:		
Warp limit 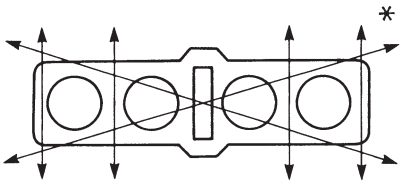	•••	0.1 mm
Cylinder:		
Bore size	79.00 ~ 79.01 mm	•••
Taper limit	•••	0.05 mm
Out of round limit	•••	0.05 mm
Wear limit	•••	79.1 mm
Camshaft:		
Drive method	Chain drive (Center)	•••
Cam cap inside diameter	25.000 ~ 25.021 mm	•••
Camshaft outside diameter	24.967 ~ 24.980 mm	•••
Shaft-to-cap clearance	0.020 ~ 0.054 mm	•••
Cam dimensions 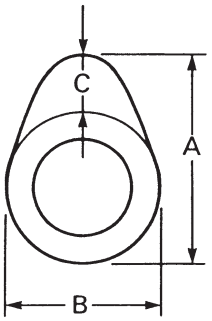		
Intake "A"	35.95 ~ 36.05 mm	35.85 mm
"B"	28.248 ~ 28.348 mm	28.15 mm
"C"	7.95 ~ 8.05 mm	•••
Exhaust "A"	35.95 ~ 36.05 mm	35.85 mm
"B"	28.248 ~ 28.348 mm	28.15 mm
"C"	7.95 ~ 8.05 mm	•••
Camshaft runout limit 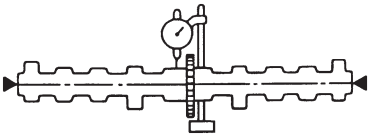	•••	0.03 mm

Model		Standard	Limit
Cam chain:			
Cam chain type/No. of links		79RH2015/156	•••
Cam chain adjustment method		Automatic	•••
Valve, valve seat, valve guide:			
Valve clearance (cold)	IN	0.11 ~ 0.15 mm	•••
	EX	0.16 ~ 0.20 mm	•••
Valve dimensions:			
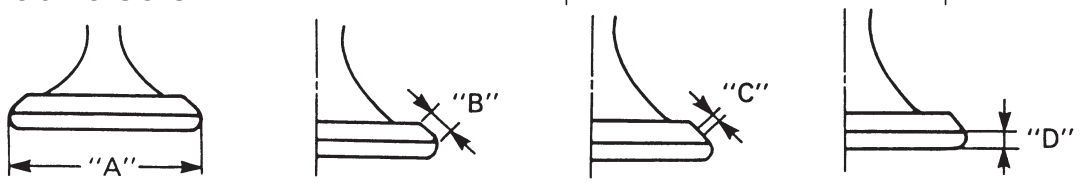 Head Dia. Face Width Seat Width Margin Thickness			
"A" head diameter	IN	28.9 ~ 29.1 mm	•••
	EX	24.9 ~ 25.1 mm	•••
"B" face width	IN	1.98 ~ 2.55 mm	•••
	EX	1.98 ~ 2.55 mm	•••
"C" seat width	IN	0.9 ~ 1.1 mm	•••
	EX	0.9 ~ 1.1 mm	•••
"D" margin thickness	IN	0.8 ~ 1.2 mm	•••
	EX	0.8 ~ 1.2 mm	•••
Stem outside diameter	IN	5.475 ~ 5.490 mm	5.445 mm
	EX	5.460 ~ 5.475 mm	5.43 mm
Guide inside diameter	IN	5.500 ~ 5.512 mm	5.552 mm
	EX	5.500 ~ 5.512 mm	5.552 mm
Stem-to-guide clearance	IN	0.010 ~ 0.037 mm	0.08 mm
	EX	0.025 ~ 0.052 mm	0.1 mm
Stem runout limit		•••	0.01 mm
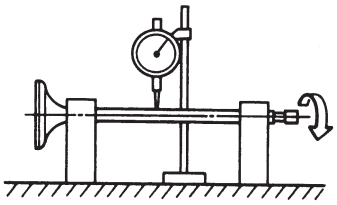			
Valve seat width	IN	0.9 ~ 1.1 mm	1.6 mm
	EX	0.9 ~ 1.1 mm	1.6 mm

Model		Standard	Limit
Valve spring:			
Inner spring			
Free length	IN	39.65 mm	37.5 mm
	EX	39.65 mm	37.5 mm
Set length (valve closed)	IN	32.8 mm	•••
	EX	32.8 mm	•••
Compressed pressure (installed)	IN	61.7 ~ 72.5 N (6.29 ~ 7.39 kg)	•••
	EX	61.7 ~ 72.5 N (6.29 ~ 7.39 kg)	•••
Tilt limit	IN	•••	2.5°/1.7 mm
	EX	•••	2.5°/1.7 mm
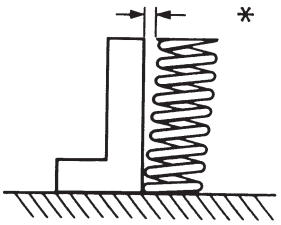			
Direction of winding (top view)	IN	Clockwise	•••
	EX	Clockwise	•••
Outer spring			
Free length	IN	41.1 mm	39 mm
	EX	41.1 mm	39 mm
Set length (valve closed)	IN	34.8 mm	•••
	EX	34.8 mm	•••
Compressed pressure (installed)	IN	130.4 ~ 154.0 N (13.3 ~ 15.7 kg)	•••
	EX	130.4 ~ 154.0 N (13.3 ~ 15.7 kg)	•••
Tilt limit	IN	•••	2.5°/1.7 mm
	EX	•••	2.5°/1.7 mm
Direction of winding (top view)	IN	Counterclockwise	•••
	EX	Counterclockwise	•••
Piston:			
Piston to cylinder clearance		0.015 ~ 0.040 mm	0.15 mm
Piston size “D”		78.970 ~ 78.985 mm	•••
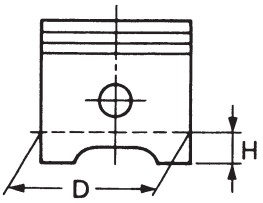			
Measuring point “H”		2 mm	•••
Piston off-set		1 mm	•••
Piston off-set direction		IN side	•••
Piston pin bore inside diameter		18.004 ~ 18.015 mm	•••
Piston pin outside diameter		17.991 ~ 18.000 mm	•••

Model	Standard	Limit
Piston rings:		
Top ring:		
Type	Barrel	•••
Dimensions (B × T)	1.00 × 3.05 mm	•••
End gap (installed)	0.20 ~ 0.35 mm	0.6 mm
Side clearance (installed)	0.045 ~ 0.080 mm	0.1 mm
2nd ring:		
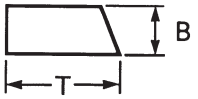		
Type	Taper	•••
Dimensions (B × T)	1.2 × 3.0 mm	•••
End gap (installed)	0.35 ~ 0.50 mm	0.75 mm
Side clearance (installed)	0.03 ~ 0.07 mm	0.1 mm
Oil ring:		
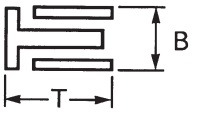		
Dimensions (B × T)	2.5 × 2.9 mm	•••
End gap (installed)	0.2 ~ 0.5 mm	•••
Side clearance	0.050 ~ 0.155 mm	•••
Connecting rod:		
Oil clearance	0.017 ~ 0.040 mm	0.08 mm
Crankshaft:		
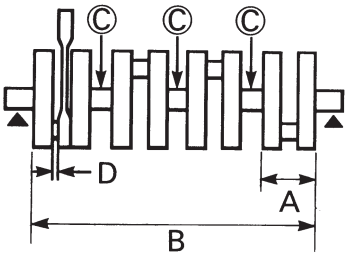		
Crank width “A”	62.25 ~ 63.85 mm	•••
Assembly width “B”	382.0 ~ 383.2 mm	•••
Runout limit “C”	0.02 mm	•••
Big end side clearance “D”	0.160 ~ 0.262 mm	0.5 mm
Journal oil clearance	0.030 ~ 0.064 mm	0.09 mm

Model		Standard	Limit
Clutch:			
Friction plate thickness		2.9 ~ 3.1 mm	2.8 mm
Quantity		8 pcs	•••
Clutch plate thickness		1.9 ~ 2.1 mm	0.1 mm <Warp limit>
Quantity		7 pcs	•••
Clutch spring height		6 mm	•••
Quantity		1 pc	•••
Clutch housing thrust clearance		0 ~ 0.2 mm	•••
Clutch housing radial clearance		0.004 ~ 0.048 mm	0.1 mm
Clutch release method		Hydraulic inner push	•••
Push rod bending limit		•••	0.3 mm
Transmission:			
Main axle deflection limit		•••	0.06 mm
Drive axle deflection limit		•••	0.06 mm
Shifter:			
Shifter type		Guide bar	•••
Guide bar bending limit		•••	0.1 mm
Carburetor:			
I.D. mark		5EA1 10	•••
Main jet	(M.J)	#95	•••
Main air jet	(M.A.J)	#45	•••
Jet needle	(J.N)	5D96-2	•••
Needle jet	(N.J)	Y-2	•••
Pilot jet	(P.A.J.1)	#127.5	•••
Pilot outlet	(P.O)	0.85	•••
Pilot jet	(P.J)	#40	•••
Bypass 1	(B.P.1)	0.9	•••
Bypass 2	(B.P.2)	1.0	•••
Bypass 3	(B.P.3)	0.8	•••
Pilot screw	(P.S)	1-1/2	•••
Valve seat size	(V.S)	2.3	•••
Starter jet	(G.S.1)	#32.5	•••
Starter jet	(G.S.2)	0.6	•••
Throttle valve size	(Th.V)	#125	•••
Float height	(F.H)	21.3 ~ 23.3 mm	•••
Fuel level (using special tool)		3.5 ~ 4.5 mm	•••
Engine idle speed		1000 ~ 1100 r/min	•••
Intake vacuum		31.3 kPa (235 mmHg)	•••

Model	Standard	Limit
Lubrication system:		
Oil filter type	Paper type	•••
Oil pump type	Trochoid type	•••
Tip clearance	0.12 ~ 0.17 mm	0.2 mm
Housing and rotor clearance	0.03 ~ 0.08 mm	0.15 mm
Side clearance	0.03 ~ 0.08 mm	0.15 mm
Bypass valve setting pressure	180 ~ 220 kPa (1.8 ~ 2.2 kg/cm^2, 1.8 ~ 2.2 bar)	•••
Relief valve operating pressure	480 ~ 580 kPa (4.8 ~ 5.8 kg/cm^2, 4.8 ~ 5.8 bar)	•••
Oil pressure (hot)	80 kPa (0.8 kg/cm^2, 0.8 bar) at 1000 r/min	•••
Pressure check location	MAIN GALLERY	•••

Tightening torques

Part to be tightened	Part name	Thread size	Q'ty	Tightening torque		Remarks
				Nm	m•kg	
Camshaft cap	Bolt	M6 × 1.0	18	12	1.2	
Oil gallery bolt	Screw	M6 × 1.0	1	7	0.7	
Spark plug	–	M12 × 1.25	4	18	1.8	
Cylinder head	Cap nut	M10 × 1.25	12	35	3.5	E
Cylinder head cover	Bolt	M6 × 1.0	8	10	1.0	
Cylinder	Stud bolt	M8 × 1.25	1	8	0.8	E
Cylinder	Nut	M8 × 1.25	3	20	2.0	
Cylinder	Nut	M6 × 1.0	6	10	1.0	
Connecting rod	Nut	M8 × 0.75	8	36	3.6	M
Cam sprocket	Bolt	M7 × 1.0	4	20	2.0	
Timing chain tensioner	Bolt	M6 × 1.0	2	10	1.0	
Timing chain tensioner cap bolt	Bolt	M11 × 1.0	1	20	2.0	
Chain guide (upper)	Bolt	M6 × 1.0	4	10	1.0	
Chain guide (intake)	Plug	M10 × 1.25	1	10	1.0	
Oil pump	Screw	M6 × 1.0	2	10	1.0	
Oil pump	Bolt	M6 × 1.0	3	10	1.0	
Oil strainer housing	Bolt	M6 × 1.0	2	10	1.0	
Oil filter case	Union bolt	M20 × 1.5	1	15	1.5	
Oil pan	Bolt	M6 × 1.0	17	10	1.0	
Drain bolt (engine oil)	Plug	M14 × 1.5	1	43	4.3	
Oil gallery blind plug	Plug	M16 × 1.5	1	8	0.8	
Drain filter	Screw	M5 × 0.8	1	7	0.7	
Oil delivery pipe (oil pan)	Bolt	M6 × 1.0	4	10	1.0	
Oil delivery pipe (oil cooler)	Bolt	M6 × 1.0	4	10	1.0	
Oil cooler	Bolt	M6 × 1.0	2	10	1.0	
Oil cooler cover	Bolt	M6 × 1.0	4	8	0.8	
Oil delivery pipe (clamp)	Bolt	M6 × 1.0	1	10	1.0	
Intake manifold	Bolt	M6 × 1.0	8	10	1.0	
Air filter case cap	Bolt	M5 × 0.8	4	5	0.5	
Air filter case	Bolt	M6 × 1.0	3	7	0.7	
Exhaust pipe	Nut	M8 × 1.25	8	25	2.5	
Muffler and stay	Bolt	M8 × 1.25	2	20	2.0	
Exhaust chamber	Bolt	M10 × 1.25	1	25	2.5	
Exhaust pipe and exhaust chamber	Screw	M8 × 1.25	4	20	2.0	
Exhaust chamber and muffler	Bolt	M8 × 1.25	2	20	2.0	
Exhaust pipe blind plug (CO test)	Bolt	M6 × 1.0	4	10	1.0	
Bearing holder (main axle)	Screw	M6 × 1.0	3	12	1.2	LT
Timing plate cover	Bolt	M6 × 1.0	4	7	0.7	LT
Crankcase cover (right)	Screw	M5 × 0.8	2	4	0.4	
Clutch cover	Bolt	M6 × 1.0	11	10	1.0	
Drive sprocket cover	Bolt	M6 × 1.0	3	10	1.0	
Clutch release cylinder	Bolt	M6 × 1.0	3	10	1.0	
Crankcase	Bolt	M6 × 1.0	16	12	1.2	

Part to be tightened	Part name	Thread size	Q'ty	Tightening torque		Remarks
				Nm	m•kg	
Crankcase	Bolt	M8 × 1.25	17	24	2.4	
Crankcase	Bolt	M10 × 1.25	5	35	3.5	
Main gallery	Plug	M20 × 1.5	3	12	1.2	
Oil buffle plate	Bolt	M5 × 0.8	3	4	0.4	
Stopper plate	Bolt	M6 × 1.0	1	10	1.0	
Bearing housing	Screw	M6 × 1.0	3	10	1.0	
HY-VO chain guide	Bolt	M6 × 1.0	2	10	1.0	
Clutch boss	Nut	M20 × 1.5	1	70	7.0	
Clutch pressure plate	Bolt	M6 × 1.0	6	8	0.8	
Push lever comp.	Bolt	M6 × 1.0	2	10	1.0	
Drive sprocket	Nut	M22 × 1.5	1	85	8.5	
Shift shaft stopper	Screw	M8 × 1.25	1	22	2.2	
Stopper plate (Starter clutch idle gear shaft)	Screw	M6 × 1.0	2	7	0.7	
Stopper lever	Bolt	M6 × 1.0	1	10	1.0	
Side plate	Screw	M5 × 0.8	1	4	0.4	
Shift arm	Bolt	M6 × 1.0	1	10	1.0	
Shift lod	Nut	M6 × 1.0	2	8	0.8	
A.C. generator	Bolt	M8 × 1.25	2	25	2.5	
Oil level sensor	Bolt	M6 × 1.0	2	10	1.0	
Rotor	Bolt	M10 × 1.25	1	45	4.5	

Tightening sequence
Cylinder head

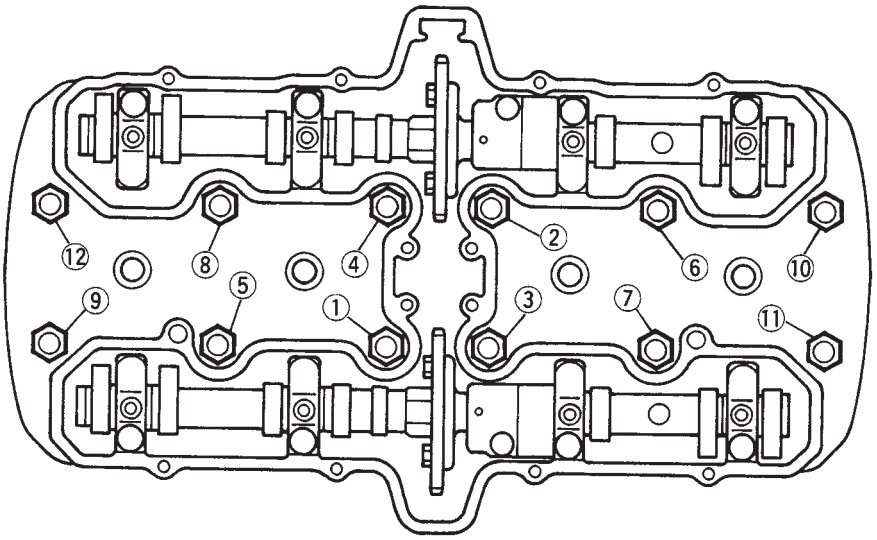

Crankcase

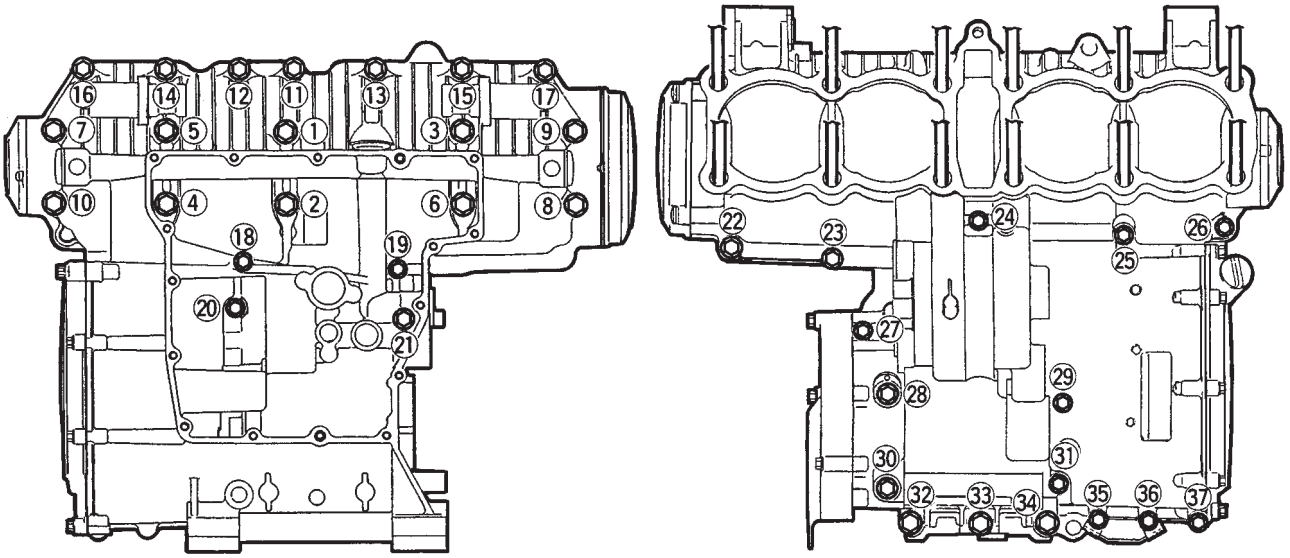

Model	XJR1300(L)

Lubrication chart:

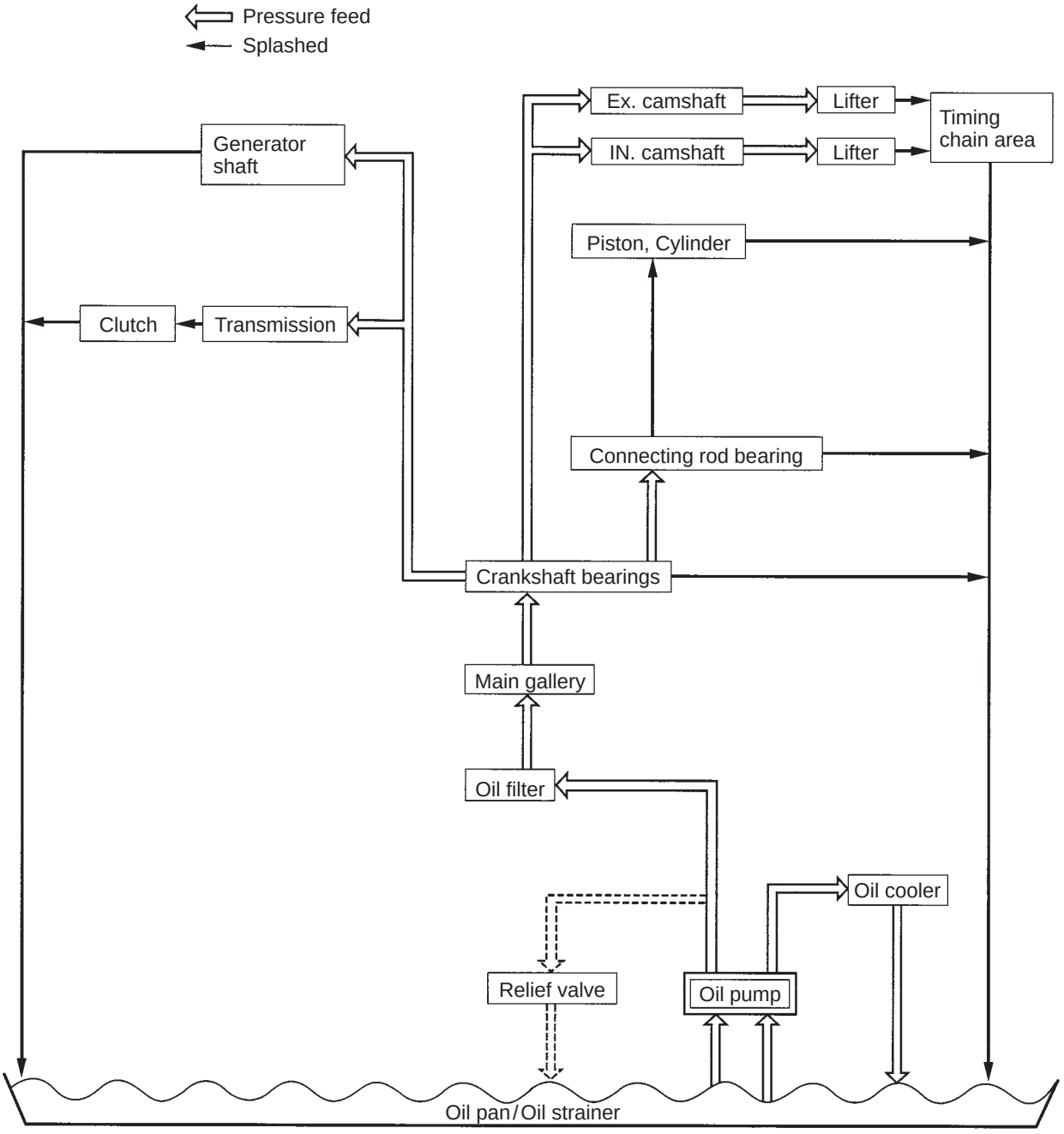

CHASSIS

Model	Standard	Limit
Steering system:		
Steering bearing type	Angular bearing	•••
Front suspension:		
Front fork travel	130 mm	•••
Fork spring free length	407.3 mm	395 mm
Fitting length	363.3 mm	•••
Collar length	150 mm	•••
Spring rate (K1)	4.9 N/mm (0.5 kg/mm)	•••
(K2)	8.8 N/mm (0.9 kg/mm)	•••
Stroke (K1)	0 ~ 83 mm	•••
(K2)	83 ~ 130 mm	•••
Optional spring	No	•••
Oil capacity	538 cm^3	•••
Oil level	137 mm	•••
Oil grade	Fork oil 10W or equivalent	•••
Rear suspension:		
Shock absorber travel	88 mm	•••
Spring free length	210 mm	206 mm
Fitting length	190 mm	•••
Spring rate (K1)	20.6 N/mm (2.1 kg/mm)	•••
(K2)	31.4 N/mm (3.2 kg/mm)	•••
Stroke (K1)	0 ~ 50 mm	•••
(K2)	50 ~ 88 mm	•••
Front wheel:		
Type	Cast wheel	•••
Rim size	17 × MT3.50	•••
Rim material	Aluminum	•••
Rim runout limit radial	•••	1 mm
lateral	•••	0.5 mm
Rear wheel:		
Type	Cast wheel	•••
Rim size	17 × MT5.50	•••
Rim material	Aluminum	•••
Rim runout limit radial	•••	1 mm
lateral	•••	0.5 mm
Drive chain:		
Type/manufacturer	50ZVM/DAIDO	•••
No. of links	110	•••
Chain free play	20 ~ 30 mm	•••

Model	Standard	Limit
Front disc brake:		
Type	Dual	•••
Disc outside diameter × thickness	298 × 5 mm	•••
Disc deflection limit	•••	0.2 mm
Pad thickness 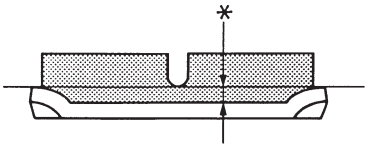	5.5 mm	0.5 mm
Master cylinder inside diameter	14 mm	•••
Caliper cylinder inside diameter	30.2 mm and 27 mm	•••
Brake fluid type	DOT #4	•••
Rear disc brake:		
Type	Single	•••
Disc outside diameter × thickness	267 × 5 mm	•••
Disc deflection limit	•••	0.15 mm
Pad thickness 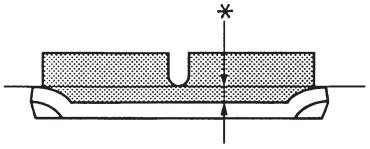	5.5 mm	0.5 mm
Master cylinder inside diameter	12.7 mm	•••
Caliper cylinder inside diameter	42.85 mm	•••
Brake fluid type	DOT #4	•••
Brake lever & brake pedal:		
Brake pedal position 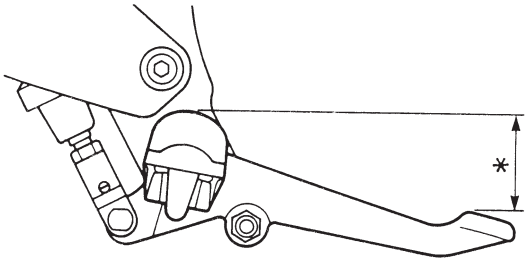	45 mm	•••
Throttle grip free play	3 ~ 5 mm	•••

Tightening torques

Part to be tightened	Part name	Thread size	Q'ty	Tightening torque		Remarks
				Nm	m•kg	
Handle crown and inner tube	Bolt	M8 × 1.25	2	30	3.0	
Handle crown and steering stem	Nut	M22 × 1.0	1	110	11.0	
Handle crown and handlebar holder (lower)	Nut	M10 × 1.25	2	40	4.0	
Upper handlebar holder	Bolt	M8 × 1.25	4	23	2.3	
Lower bracket and inner tube	Bolt	M8 × 1.25	4	23	2.3	
Steering stem and ring nut	Nut	M25 × 1.0	1	18	1.8	See "NOTE"
Front master cylinder and holder	Bolt	M6 × 1.0	2	10	1.0	
Front brake hose union bolt	Bolt	M10 × 1.25	1	30	3.0	
Meter	Nut	M6 × 1.0	2	7	0.7	
Headlight stay (lower)	Bolt	M6 × 1.0	2	10	1.0	
Grip end	–	M16 × 1.5	2	26	2.6	
Front turn signal lights	Nut	M12 × 1.25	2	7	0.7	
Front fender and front fork	Bolt	M6 × 1.0	4	7	0.7	
Headlight stay and upper cover	Cap nut	M6 × 1.0	4	7	0.7	
Engine stay (front) and frame	Bolt	M8 × 1.25	4	30	3.0	
Engine mount (front)	Nut	M10 × 1.25	2	64	6.4	
(rear-upper)	Nut	M10 × 1.25	1	55	5.5	
Engine stay (rear-upper) and frame	Bolt	M10 × 1.25	2	48	4.8	
Engine stay (rear-upper) and frame	Bolt	M12 × 1.25	2	88	8.8	
Engine stay (rear-lower)	Nut	M10 × 1.25	2	64	6.4	
Frame and down tube	Nut and Bolt	M8 × 1.25	4	26	2.6	
Pivot shaft	Nut	M18 × 1.5	1	125	12.5	
Rear shock absorber and frame	Bolt	M8 × 1.25	1	23	2.3	
Rear shock absorber and swing arm	Bolt	M10 × 1.25	1	30	3.0	
Drive chain guide and swing arm	Bolt	M6 × 1.0	1	7	0.7	
Chain case and swing arm	Screw	M6 × 1.0	2	7	0.7	
Fuel tank	Bolt	M8 × 1.25	1	19	1.9	
Fuel tank cap	Screw	M5 × 0.8	4	6	0.6	
Fuel cock	Screw	M6 × 1.0	2	7	0.7	
Seat lock	Nut	M6 × 1.0	2	7	0.7	
Fuel sender	Bolt	M5 × 0.8	4	4	0.4	
Side cover and frame	Screw	M6 × 1.0	2	7	0.7	
Tail light	Nut	M6 × 1.0	3	7	0.7	
Rear fender and frame	Bolt	M6 × 1.0	4	7	0.7	
Rear fender cover and cover	Screw	M5 × 0.8	2	4	0.4	
Rear fender cover and frame	Screw	M6 × 1.0	2	7	0.7	
Grab bar	Bolt	M8 × 1.25	4	30	3.0	
Ignitor	Screw	M6 × 1.0	2	7	0.7	
Rear turn signal light and rear fender	Nut	M12 × 1.25	2	4	0.4	

Part to be tightened	Part name	Thread size	Q'ty	Tightening torque		Remarks
				Nm	m•kg	
Hook	Screw	M6 × 1.0	2	7	0.7	
Helmet holder	Bolt	M6 × 1.0	2	13	1.3	
Tail light bracket	Bolt	M8 × 1.25	4	30	3.0	
Side stand	Bolt	M10 × 1.25	1	40	4.0	
Side stand	Nut	M10 × 1.25	1	40	4.0	
Side stand switch	Screw	M5 × 0.8	2	4	0.4	
Footrest bracket	Bolt	M8 × 1.25	4	28	2.8	
Rear footrest bracket	Bolt	M8 × 1.25	4	28	2.8	
Footrest and footrest bracket	Bolt	M10 × 1.25	2	55	5.5	
Rear brake reservoir tank	Screw	M6 × 1.0	1	5	0.5	
Rear master cylinder and bracket	Bolt	M8 × 1.25	2	23	2.3	
Center stand	Nut and Bolt	M10 × 1.25	2	41	4.1	
Front wheel axle	–	M16 × 1.5	1	73	7.3	
Front wheel axle pinch bolt	Bolt	M8 × 1.0	1	19	1.9	
Front brake caliper and front fork	Bolt	M10 × 1.25	4	40	4.0	
Front brake disk and hub	Bolt	M8 × 1.25	12	20	2.0	LT
Front brake caliper and bleed screw	–	M8 × 1.25	2	6	0.6	
Front brake hose	Union bolt	M10 × 1.25	2	30	3.0	
Tensionbar and swingarm	Nut and bolt	M8 × 1.25	2	23	2.3	
Driven sprocket and hub	Nut	M8 × 1.25	6	60	6.0	
Chain puller	Nut	M8 × 1.25	2	16	1.6	
Rear brake caliper and caliper bracket	Bolt	M10 × 1.25	2	40	4.0	
Rear wheel axle	Nut	M18 × 1.5	1	150	15.0	
Rear brake hose	Union bolt	M10 × 1.25	2	30	3.0	
Rear brake caliper and bleed screw	–	M8 × 1.25	1	6	0.6	
Rear brake disc and hub	Bolt	M8 × 1.25	6	20	2.0	LT

NOTE:

1. First, tighten the ring nut approximately 52 Nm (5.2 m•kg) by using the torque wrench, then loosen the ring nut one turn.
2. Retighten the ring nut to specification.

ELECTRICAL

Model	Standard	Limit
Voltage:	12 V	•••
Ignition system:		
Ignition timing (B.T.D.C.)	5° /1050 r/min	•••
Advanced timing (B.T.D.C.)	50° /5000 r/min	•••
Advancer type	TPS & Electrical type	•••
T.C.I.:		
Pickup coil resistance/color	248 ~ 372 Ω/W/R-W/G	•••
T.C.I. unit model/manufacturer	5EA20/YAMAHA	•••
Ignition coil:		
Model/manufacturer	83R/YAMAHA	•••
Minimum spark gap	6 mm	•••
Primary winding resistance	1.9 ~ 2.9 Ω	•••
Secondary winding resistance	9.5 ~ 14.3 kΩ	•••
Spark plug cap:		
Type	Resin type	•••
Resistance	10 kΩ	•••
Charging system:		
Type	A.C. generator	•••
Model/manufacturer	B3G-B/DENSO	•••
Normal output	13.5 V 28 A/3000 r/min	•••
Rotor coil resistance	2.8 ~ 3.0 Ω	•••
Stator coil resistance	0.19 ~ 0.21 Ω	•••
Brush overall length	13.7 mm	4.7 mm
Spring force	5.10 ~ 5.69 N (0.52 ~ 0.58 kg)	•••
Voltage regulator:		
Type	Semi-conductor, field control type	•••
Model/manufacturer	B3G-B/DENSO	•••
No load regulated voltage	14.2 ~ 14.8 V	•••
Electric starter system:		
Type	Constant mesh type	•••
Starter motor:		
Model/manufacturer	SM-13/MITSUBA	•••
Output	0.65 kW	•••
Brush overall length	10 mm	5 mm
Spring force	7.65 ~ 10.01 N (0.780 ~ 1.021 kg)	•••
Commutator diameter	28 mm	27 mm

Model	Standard	Limit
Mica undercut	0.7 mm	•••
Starter relay:		
Model/manufacturer	MS5E-491/JIDECO	•••
Amperage rating	100 A	•••
Coil winding resistance	4.2 ~ 4.6 Ω	•••
Horn:		
Type	Plane type	•••
Quantity	2 pcs	•••
Model/manufacturer	YF12/NIKKO	•••
Maximum amperage	3 A	•••
Flasher relay:		
Type	Full transistor type	•••
Model/manufacturer	FE246BH/DENSO	•••
Self cancelling device	No	•••
Flasher frequency	75 ~ 95 cyl/min	•••
Oil level switch:		
Model/manufacturer	5G2/DENSO	•••
Fuel gauge:		
Model/manufacturer	4 KG/NIPPON SEIKI	•••
Sender unit resistance full	4 ~ 10 Ω	•••
empty	90 ~ 100 Ω	•••
Starting circuit cut-off relay:		
Model/manufacturer	G8R-30Y-J/OMRON	•••
Coil winding resistance	162 ~ 198 Ω	•••
Diode	Yes	•••
Oil level switch relay:		
Model/manufacturer	G8D-117Y-2/OMRON	•••
Circuit breaker:		
Type	Fuse	•••
Amperage for individual circuit × Q'ty		
MAIN	30 A × 1	•••
HEAD LIGHT	15 A × 1	•••
SIGNAL	15 A × 1	•••
IGNITION	7.5 A × 1	•••
Reserve	30 A × 1	•••
	15 A × 1	•••
	7.5 A × 1	•••

EAS00028

CONVERSION TABLE

All specification data in this manual are listed in SI and METRIC UNITS.
Use this table to convert METRIC unit data to IMPERIAL unit data.

Ex.

METRIC		MULTIPLIER		IMP
** mm	x	0.03937	=	** in
2 mm	x	0.03937	=	0.08 in

CONVERSION TABLE

METRIC TO IMP			
	Known	Multiplier	Result
Torque	m•kg m•kg cm•kg cm•kg	7.233 86.794 0.0723 0.8679	ft•lb in•lb ft•lb in•lb
Weight	kg g	2.205 0.03527	lb oz
Distance	km/hr km m m cm mm	0.6214 0.6214 3.281 1.094 0.3937 0.03937	mph mi ft yd in in
Volume/ Capacity	cc (cm^3) cc (cm^3) lt (liter) lt (liter)	0.03527 0.06102 0.8799 0.2199	oz (IMP liq.) cu•in qt (IMP liq.) gal (IMP liq.)
Miscella-neous	kg/mm kg/cm^2 Centigrade	55.997 14.2234 9/5 (°C) + 32	lb/in psi (lb/in^2) Fahrenheit (°F)

EAS00029

GENERAL TIGHTENING TORQUES

This chart specifies tightening torques for standard fasteners with a standard ISO thread pitch. Tightening torque specifications for special components or assemblies are provided for each chapter of this manual. To avoid warpage, tighten multi-fastener assemblies in a criss-cross pattern and progressive stages until the specified tightening torque is reached. Unless otherwise specified, tightening torque specifications require clean, dry threads. Components should be at room temperature.

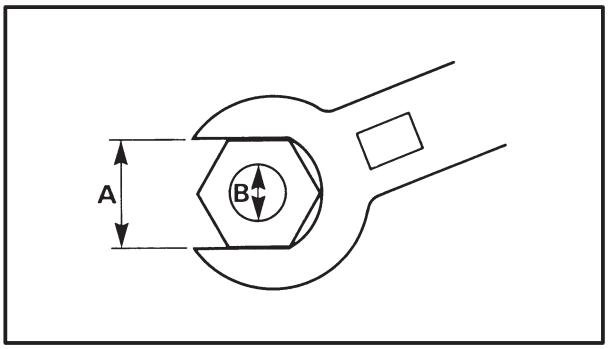

A: Distance across flats
B: Outside thread diameter

A (Nut)	B (Bolt)	General specifications torques	
		Nm	m•kg
10 mm	6 mm	6	0.6
12 mm	8 mm	15	1.5
14 mm	10 mm	30	3.0
17 mm	12 mm	55	5.5
19 mm	14 mm	85	8.5
22 mm	16 mm	130	13.0

LUBRICATION POINT AND GRADE OF LUBRICANT

ENGINE

Lubrication Point	Symbol
Oil seal lips	LS
O-ring	LS
Bearing	E
Piston surface	E
Piston pin	E
Crankshaft pin	E
Crankshaft journal/big end	E
Connecting rod bolt/nut	M
Camshaft cam lobe/journal	M
Valve stem (IN, EX)	M
Valve stem end (IN, EX)	E
Valve lifter	E
Oil pump rotor (inner/outer), housing	E
Oil strainer assembly	E
Starter idle gear inner surface	E
Starter wheel gear inner surface	E
Starter clutch (outer/roller)	E
Crankcase cover (push rod hole)	M
Primary drive gear/damper	E
Transmission gear (wheel/pinion)	M
Shift cam	E
Shift fork/guide bar	E
Shift shaft assembly	E
Crankcase mating surfaces	Yamaha bond No. 1215
Blind plug and oil seal (crankcase main gallery)	Yamaha bond No. 1215

LUBRICATION POINT AND GRADE OF LUBRICANT

CHASSIS

Lubrication Point	Symbol
Steering bearing (upper/lower) and bearing cover lip	LS
Front wheel oil seal (left/right)	LS
Rear wheel oil seal (left/right)	LS
Clutch hub fitting area	LS
Rear brake pedal shaft	LS
Shift pedal	LS
Centerstand sliding surface	LS
Sidestand sliding surface	LS
Tube guide (throttle grip) inner surface	LS
Brake lever bolt, sliding surface	LS
Clutch lever bolt, sliding surface	LS
Rear footrest pivot	LS
Swingarm pivot bearing	M
Swingarm pivot shaft outer surface	M
Swingarm thrust cover lip	M

LUBRICATION DIAGRAMS

① Camshaft (intake)
② Camshaft (exhaust)
③ Main gallery
④ Oil strainer
⑤ Oil pump
⑥ Main axle
⑦ Crankshaft

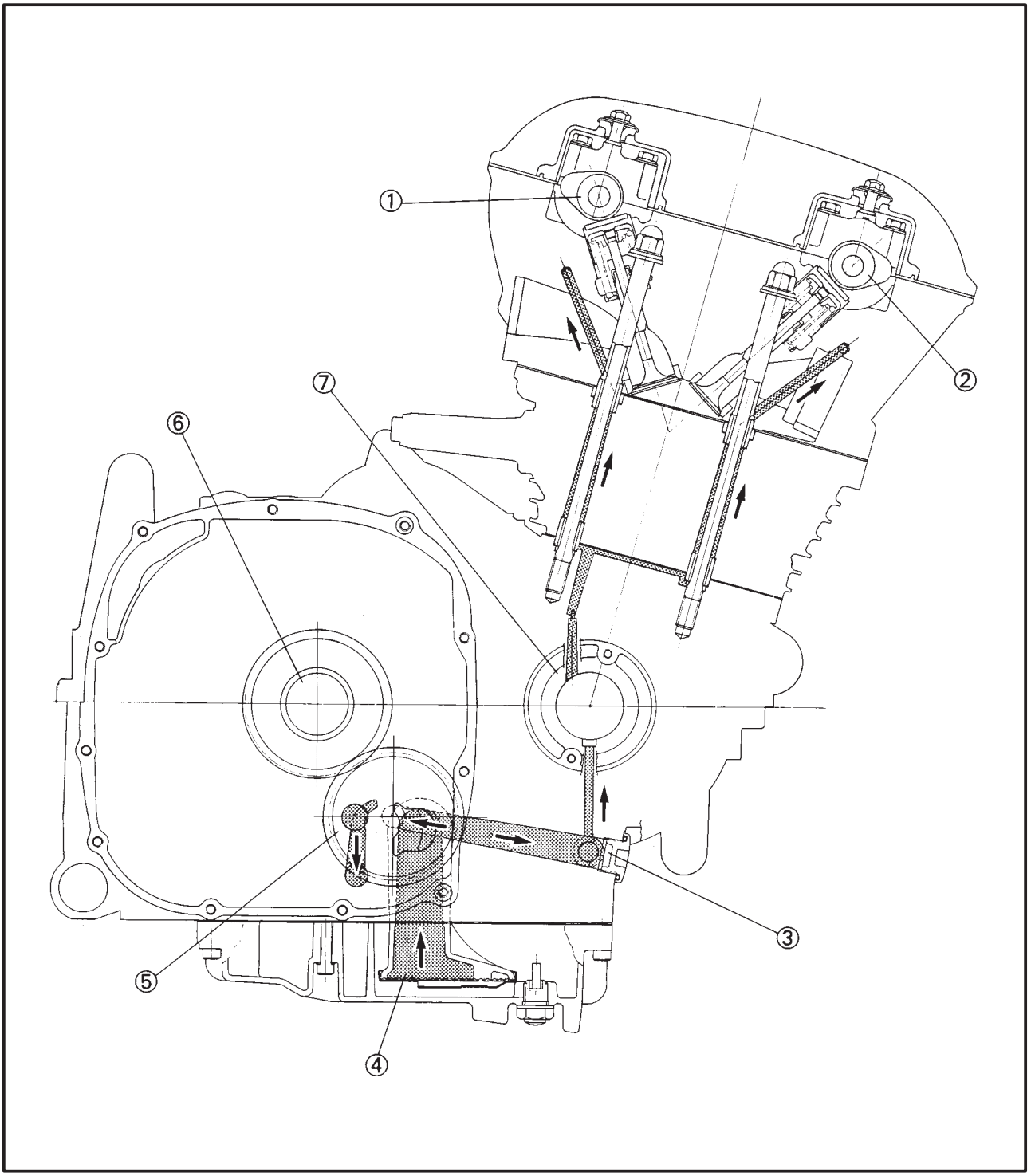

① Oil cooler
② Starter clutch
③ Main axle
④ Drive axle
⑤ Oil pump
⑥ Oil pan
⑦ Relief valve
⑧ Main gallery

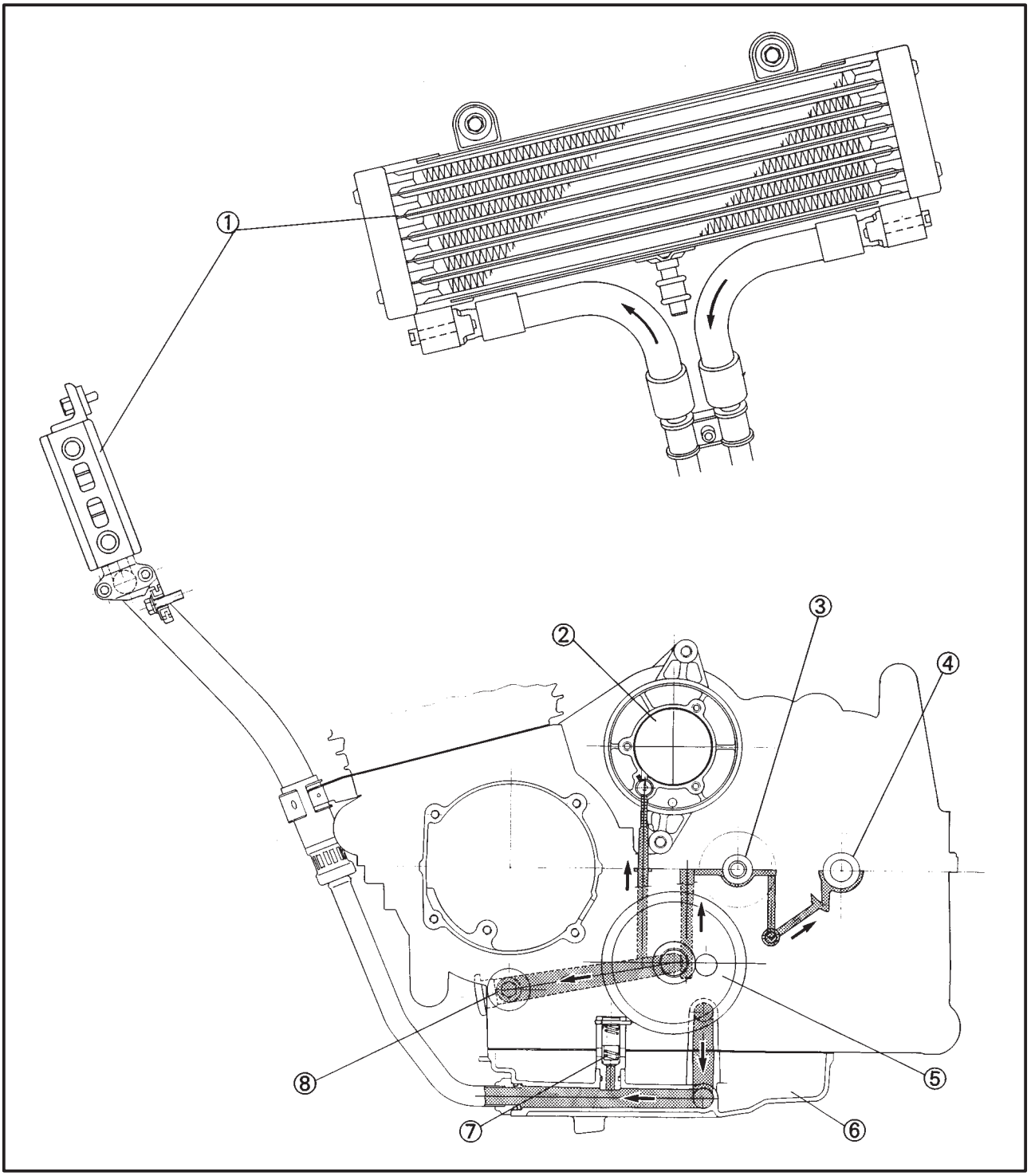

① Camshaft
② Crankshaft
③ Oil pump
④ Oil filter

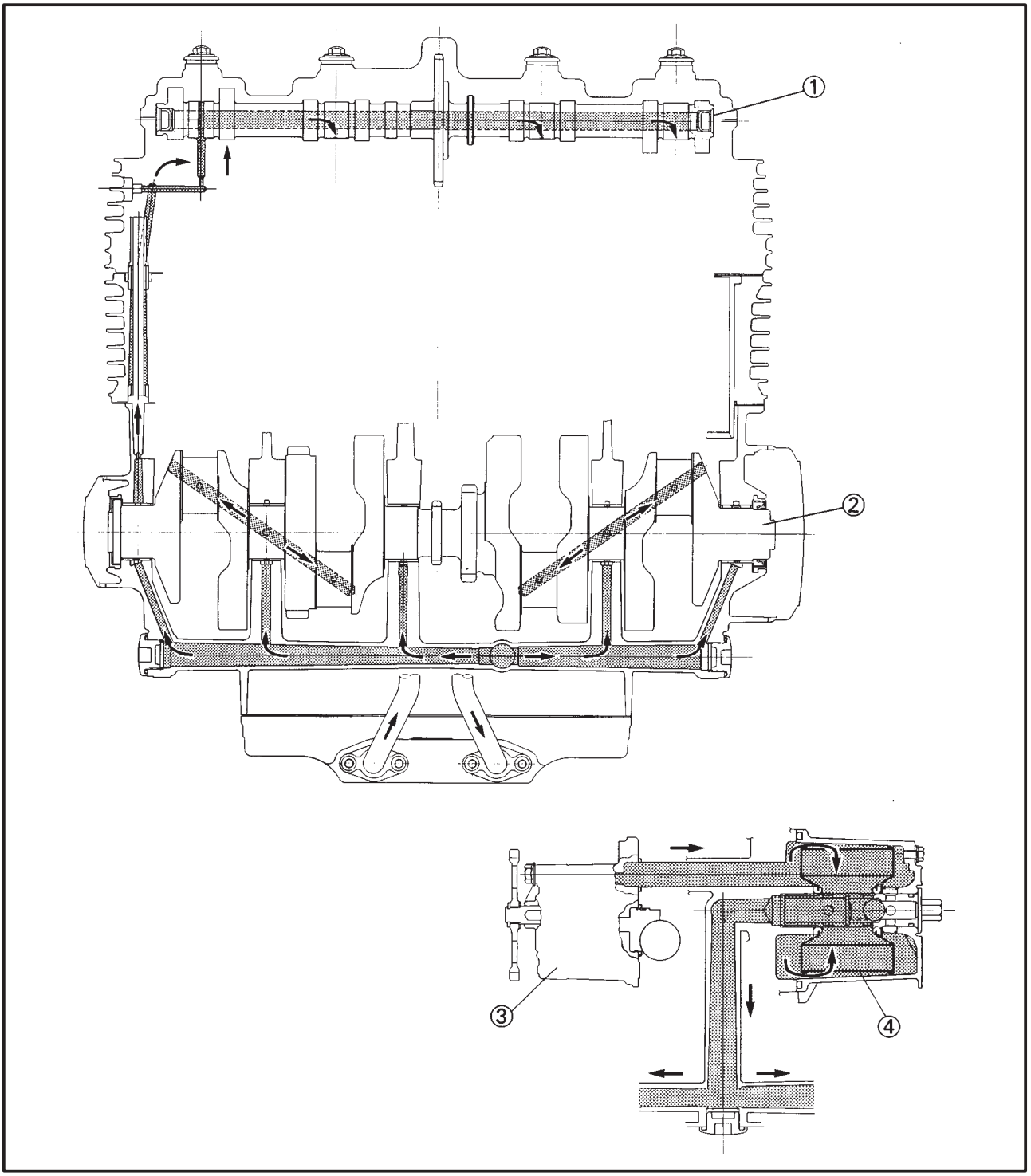

CABLE ROUTING

① Starter motor cable
② Battery negative (–) lead
③ Battery negative (–) lead connector
④ AC generator connector
⑤ Rear brake switch lead connector
⑥ Neutral lead
⑦ Pickup lead
⑧ Sidestand switch lead
⑨ Throttle position sensor
⑩ Ignition coil lead (#2, 3)
⑪ Throttle cable
⑫ Engine ground lead
⑬ Air ventilation hose
⑭ Rear brake switch
⑮ Starting circuit cutoff relay

A Fasten the wireharness to the seat rail with a plastic band. Make sure that the end of band down ward.
B Align the white tape on the wireharness with a plastic band and fasten them to the seat real. Make sure that the end of band down ward.
C Fasten the wireharness with the steel clamp on the frame.

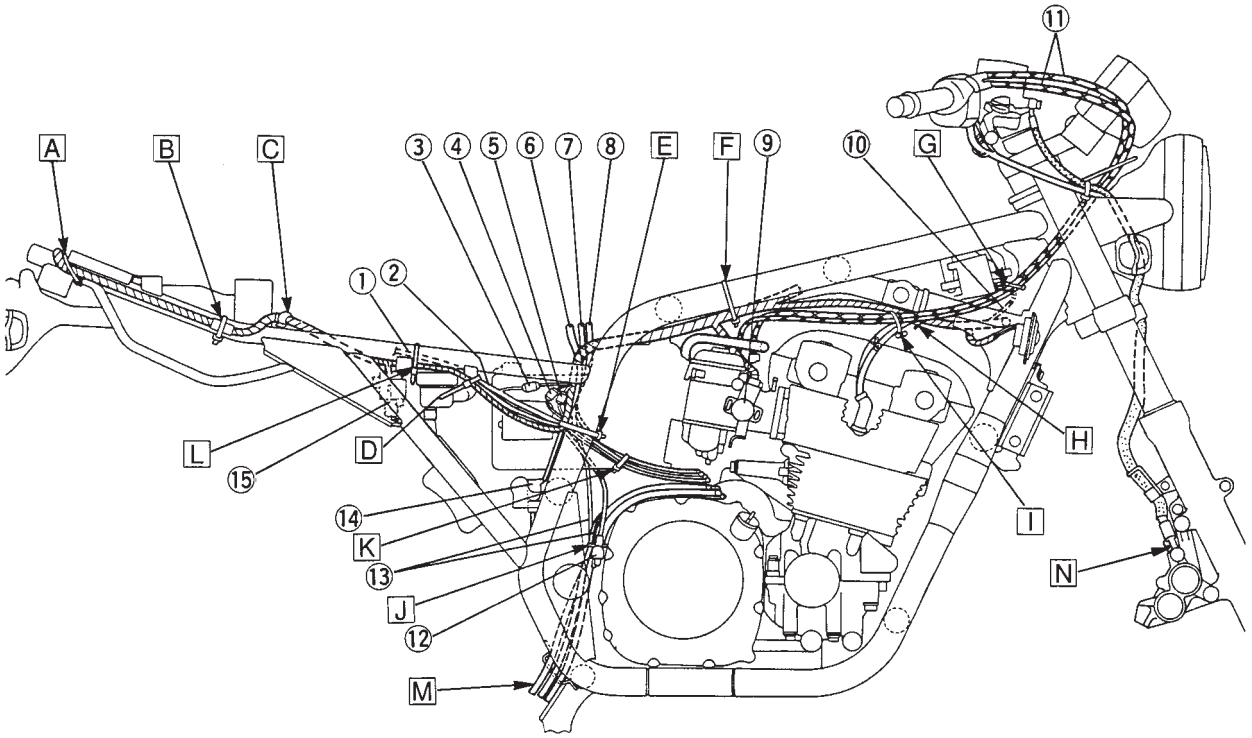

D Route the wireharness and starter motor cable in front of the reservoir tank bracket and the battery negative (–) lead behind the reservoir tank bracket. And fasten them with a plastic band.

E Fasten the wireharness, neutral lead, sidestand switch lead, pick-up coil lead, AC generator lead and rear brake switch lead to the frame with a plastic band. Make sure that the end of band forward of motorcycle.

F Fasten the wireharness to the frame with a plastic band. Make sure that the end of band down ward.

G Insert the plastic band through the hole of plastic panel and then fasten the throttle cables with it. Make sure that the end of band inside of motorcycle.

H Fasten the wireharness to the frame with a plastic band. Make sure that the end of band down ward.

I Fasten the high tension cables and throttle cables with a plastic clamp.

J Route the air ventilation hoses, air filter case drain hose, fuel tank drain hose and fuel tank breather hose through the engine guide.

K Fasten the AC generator lead, pick-up coil lead, sidestand switch lead and starter motor cable with a plastic band.

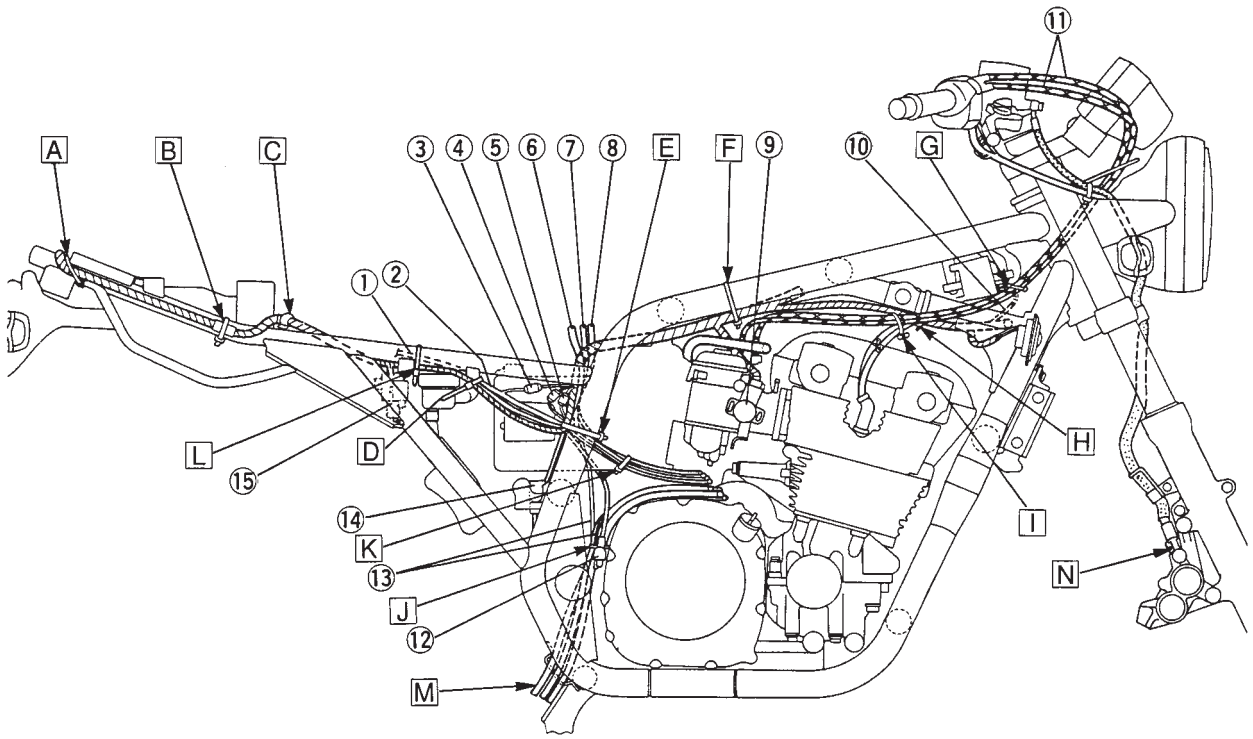

L Route the wireharness and starter motor cable behind the side cover bracket and fasten them with a plastic band at front of the bracket.
M Align the white paint marks of the fuel tank drain hose, fuel tank breather hose and air filter case drain hose.
N Touch the brake pipe to the brake caliper stopper.

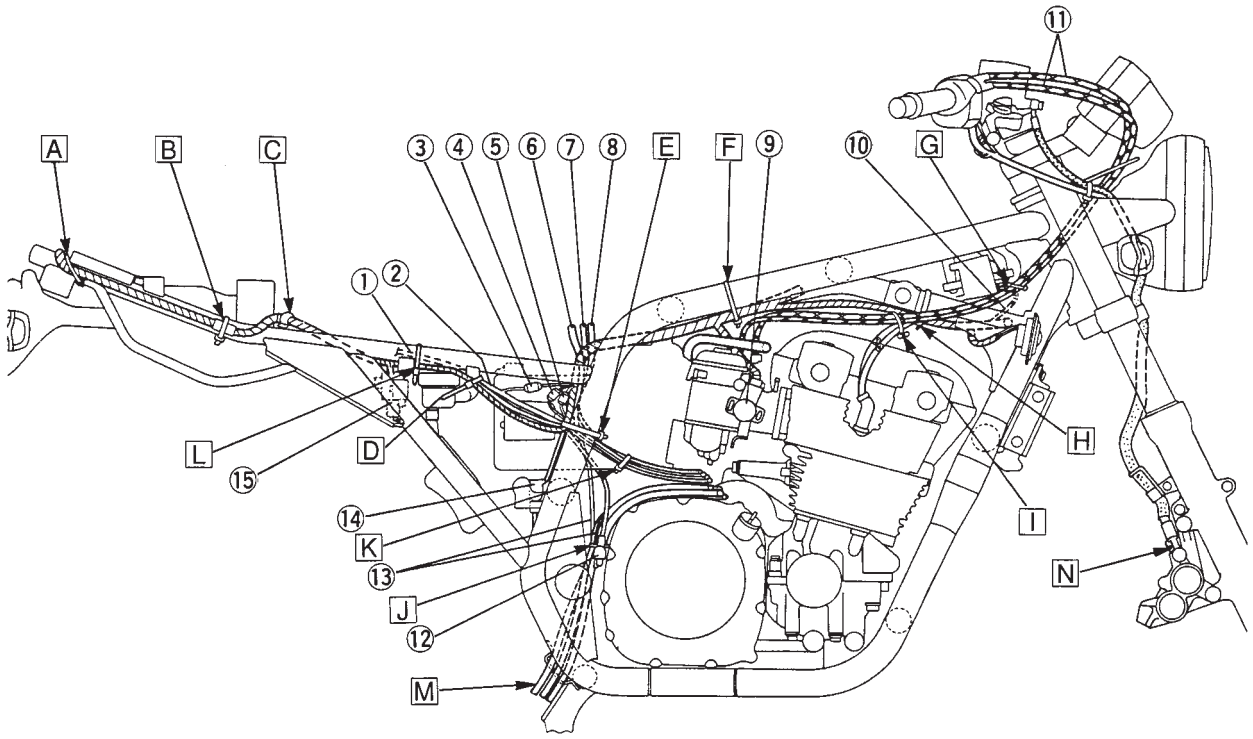

① Clutch hose
② Starter cable
③ Air filter case drain hose
④ Frame ground
⑤ Flasher relay connector
⑥ Oil light relay connector
⑦ Igniter unit connectors
⑧ Starter motor
⑨ AC generator
⑩ Sidestand switch
⑪ Sidestand switch lead
⑫ Ignition coil lead (#1, 4)

A Insert the plastic band through the hole of plastic panel and then fasten the clutch hose with it. Make sure that the end of band inside of motorcycle.
B To headlight lower hole.
C Route the wireharness and starter cable through the guide.
D Connect the ignition lead with white marking tape to the ignition coil (#1, 4).
E Fasten the high tension cables (#1, 2) with a plastic clamp. Position the clamp at 50 – 80 mm above the high tension cable number.
F Fasten the horn lead to the frame with a plastic band. Make sure that the end of band down ward.
G Install the frame ground and igniter unit together with screw.

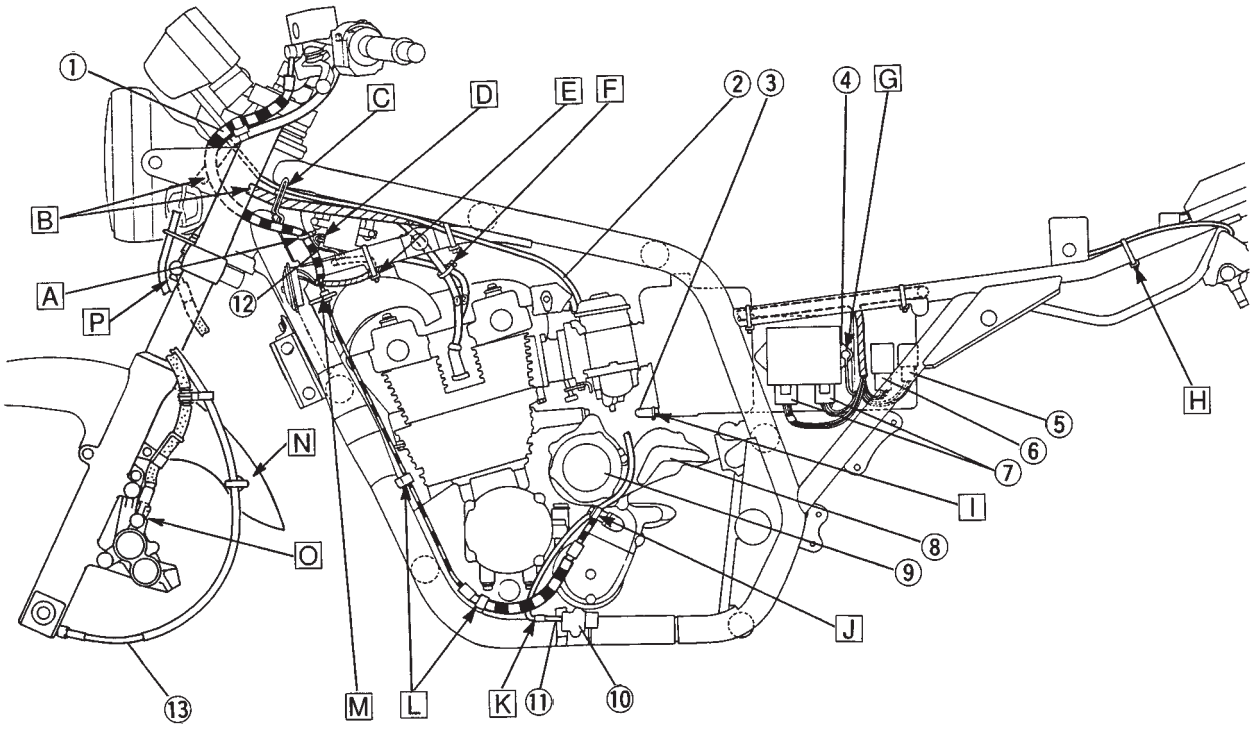

[H] Fasten the seat lock cable to the seat real with a plastic band. Make sure that the end of band down ward.
[I] Route the air filter case drain hose over the starter motor to right side of motorcycle.
[J] Position the clutch pipe parallel with the oil filter cover.
[K] Fasten the sidestand switch lead with steel clamp on the frame and then route it between the pickup cover, oil filter cover, AC generator and starter motor to the right side of motorcycle.
[L] Fasten the clutch hose with steel clamp on the frame.
[M] Clamp the gromet on the clutch hose with wire holder on the frame.
[N] Route the speedometer cable through the guide.
[O] Touch the brake pipe to the brake caliper stopper.
[P] Touch the brake pipe to the brake hose joint.

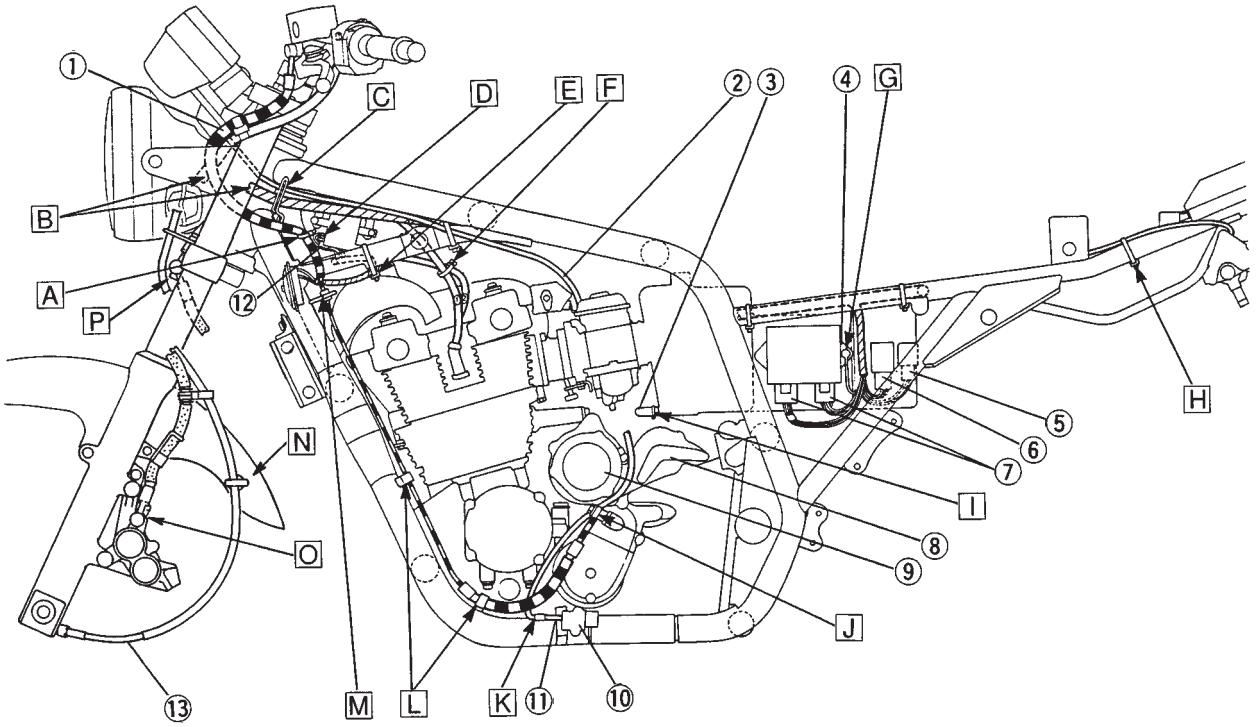

① Throttle cables
② Ignition coil (#2, 3)
③ Throttle position sensor
④ Neutral switch connector
⑤ Pickup coil connector
⑥ Sidestand switch connector
⑦ Battery
⑧ Reservoir tank
⑨ Battery negative (–) lead
⑩ Starting circuit cutoff relay
⑪ Battery positive (+) lead connector
⑫ Starter relay
⑬ Seat lock cable
⑭ Seat lock
⑮ Battery positive (+) lead
⑯ Fuse box
⑰ Starter relay connector
⑱ Flasher relay
⑲ Oil light relay
⑳ Igniter unit
㉑ Fuel sender connector
㉒ Starter cable
㉓ Ignition coil (#1, 4)
㉔ Taillight lead
㉕ Starter cable

A Position the horn (high) to right side.
B Fasten the throttle cable (front side) to the frame with a plastic clamp.
C Fasten the throttle position sensor with steel clamp on the carburetor (#4).
D To fuel sender.

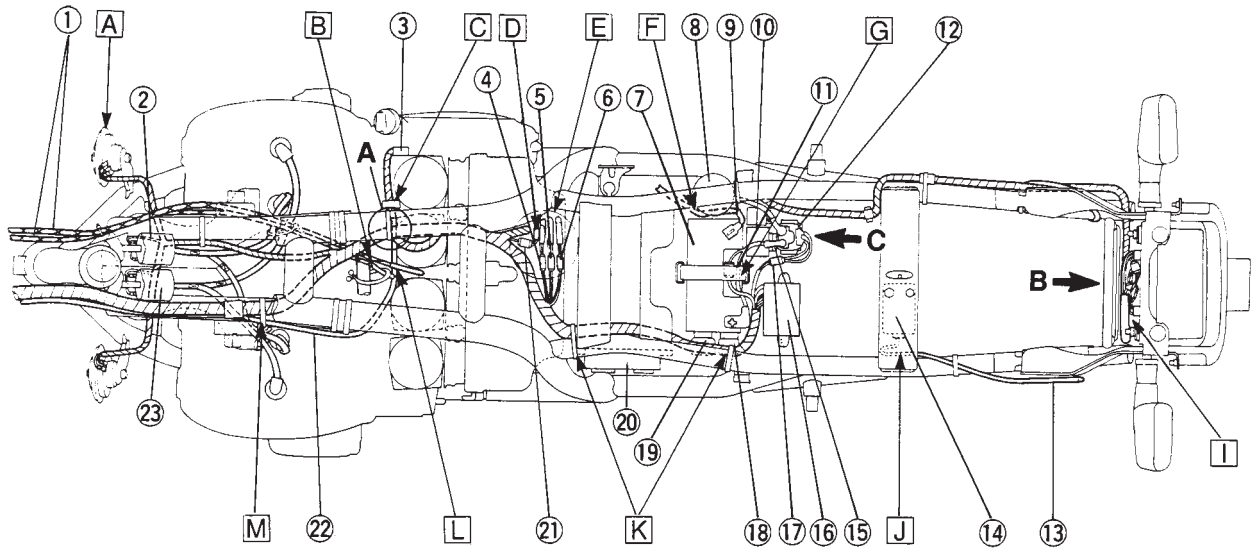

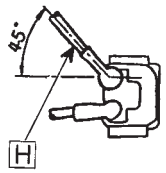

Fig.C

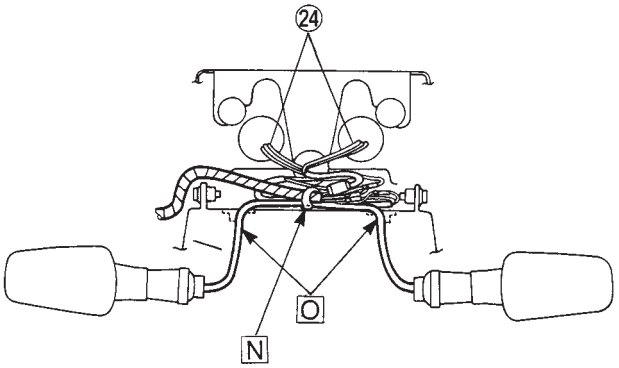

Fig.B

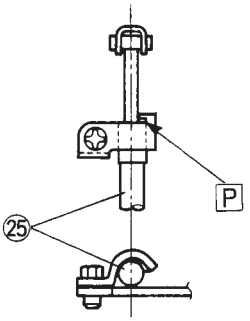

Fig.A

E Connect the fuel sender connector, neutral switch connector, pickup coil connector and side-stand switch connector above the air filter case.

F Route the battery negative (–) lead inside of the reservoir tank bracket and under the reservoir tank and then connect it.

G Fasten the battery positive (+) lead and battery positive (+) lead connector on the groove of the battery with the battery rubber band.

H Position the starter motor cable at 45 degree out side of the motorcycle.

I Position the wireharness, taillight lead and rear turn signal light leads (left and right) between the taillight bracket and rear fender rib.

J Position the seat lock cable inside under the seat lock bracket.

K Fasten the wireharness to the frame with a plastic band. Make sure that the end of band down ward.

L Route the starter cable between the throttle cables.

M Fasten the wireharness, starter cable to the frame with a plastic band. Make sure that end of band down ward.

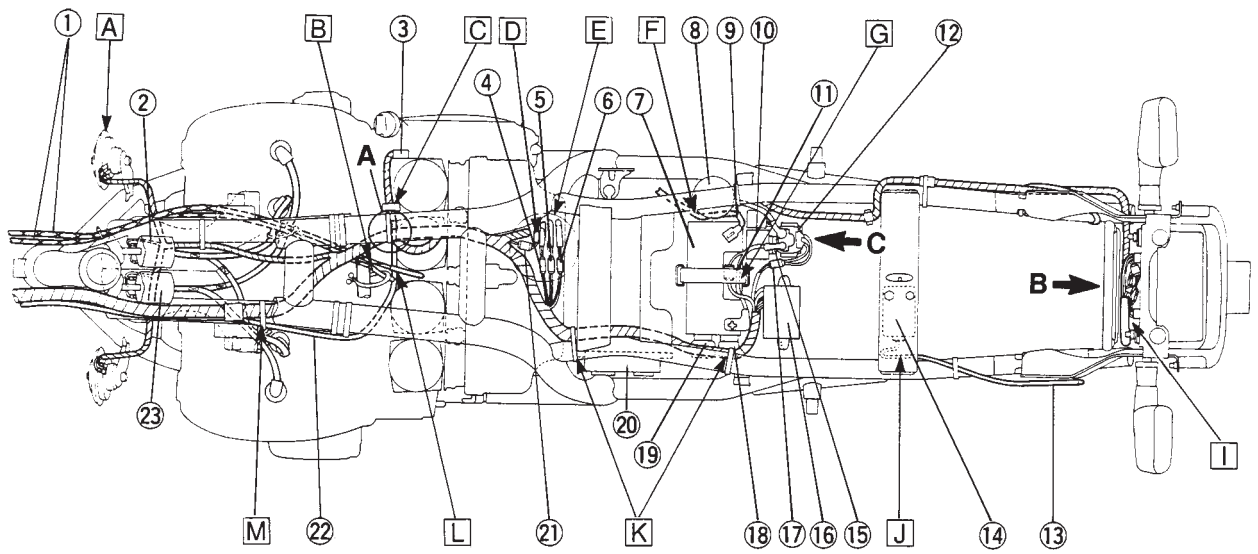

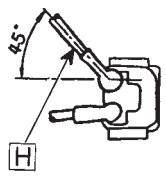

Fig.C

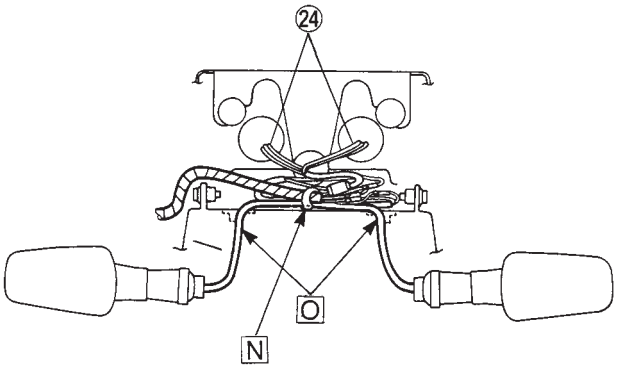

Fig.B

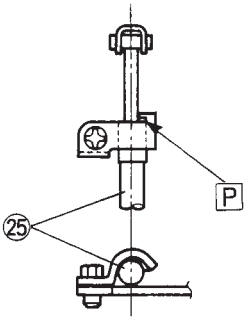

Fig.A

N Fasten the wireharness, taillight lead and rear turn signal light leads (left and right) with steel clamp on the frame make sure that the end of clamp forward.
O Route the rear turn signal light leads (left and right) through the each holes of the rear fender.
P Touch the starter cable to the stopper and position it vertical of the motorcyle.

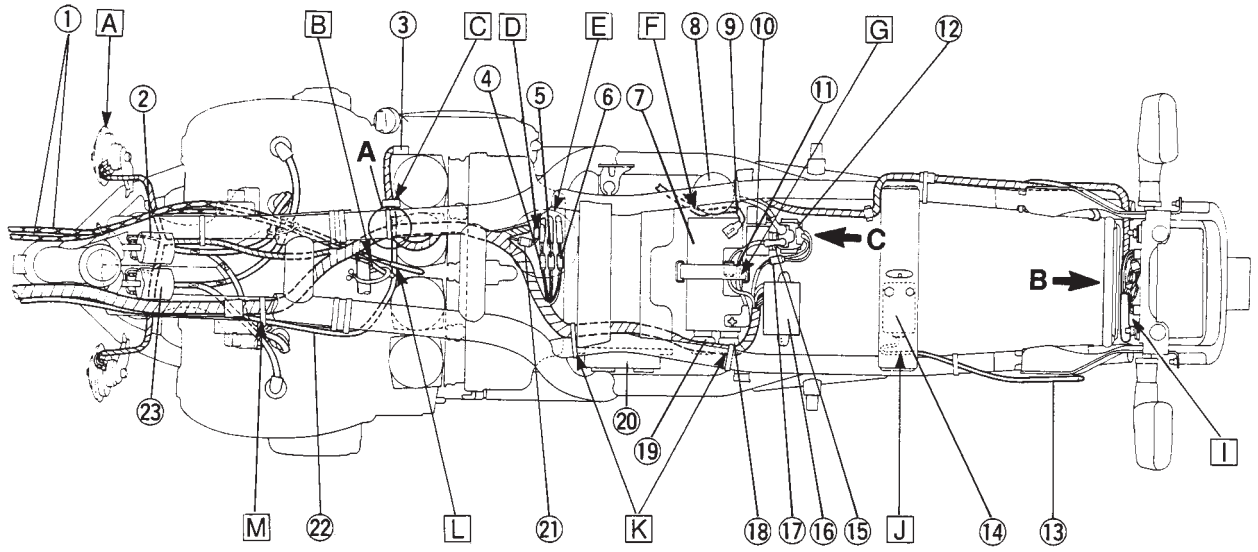

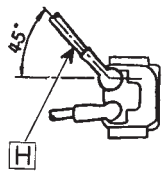

Fig.C

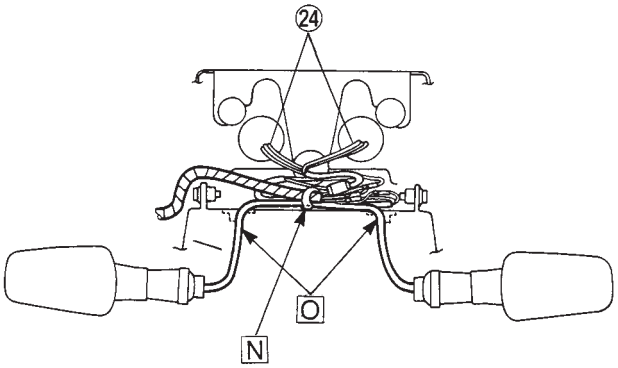

Fig.B

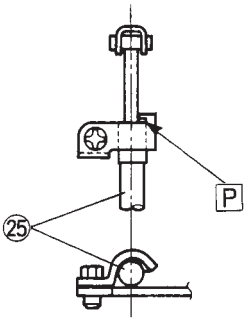

Fig.A

① Meter leads
② Main switch lead
③ Starter cable
④ Handlebar switch lead (left)
⑤ Clutch hose
⑥ Brake hose
⑦ Handlebar switch lead (right)

A Route the throttle cables through the guide on the headlight stay.
B Route the meter leads, main switch lead into the upper hole of the headlight body.
C Route the handlebar switch lead (left) inside of the clutch hose. Fasten the handlebar switch lead (left), clutch hose and starter cable with a plastic band.
D Route the handlebar switch lead (left) and front turn signal light lead (left) into the left under hole of the headlight body.
E Route the front turn signal light leads (left and right) in front of the headlight stay.
F Route the speedometer cable through the guide on the headlight stay.
G To front brake master cylinder.

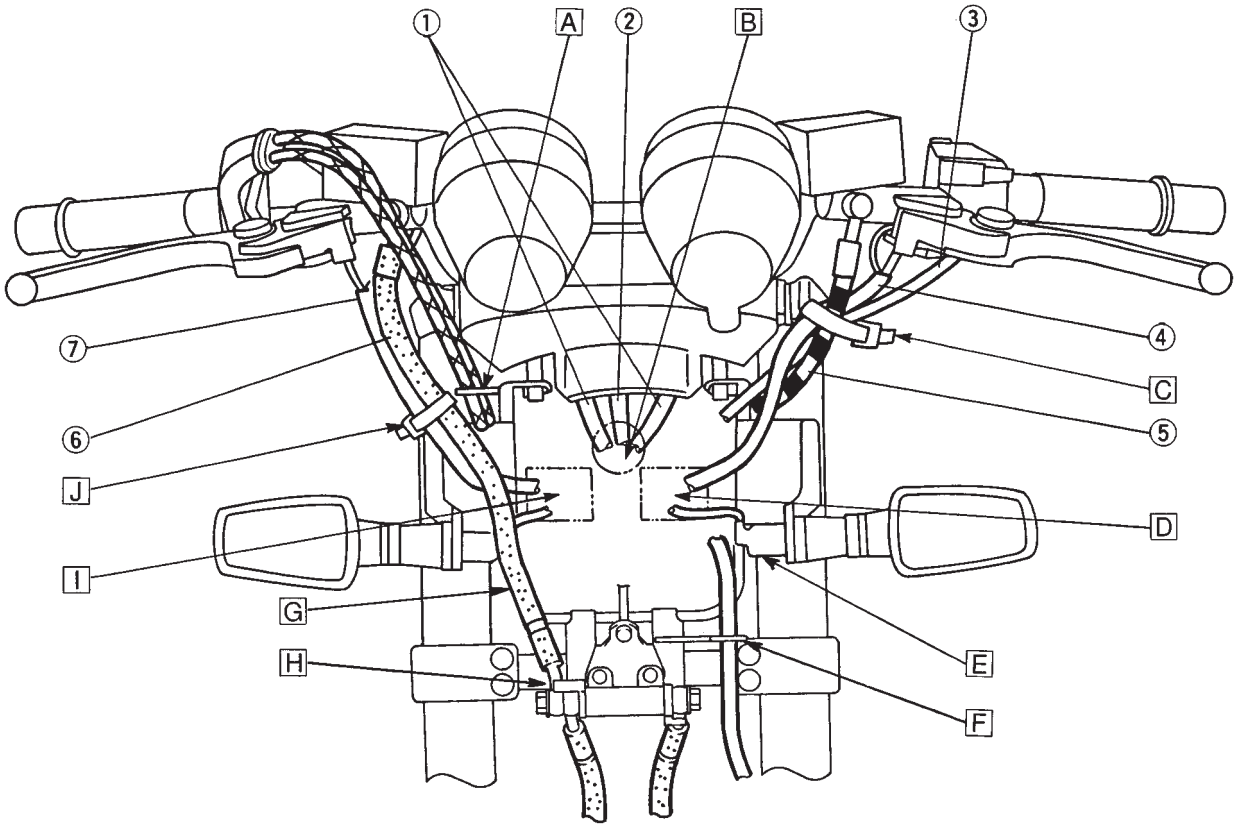

H Touch the brake pipe to the stopper.
I Route the handlebar switch lead (right) and front turn signal light lead (right) into the right under hole of the headlight stay.
J Fasten the handlebar switch lead (right) and front brake hose with a plastic band.

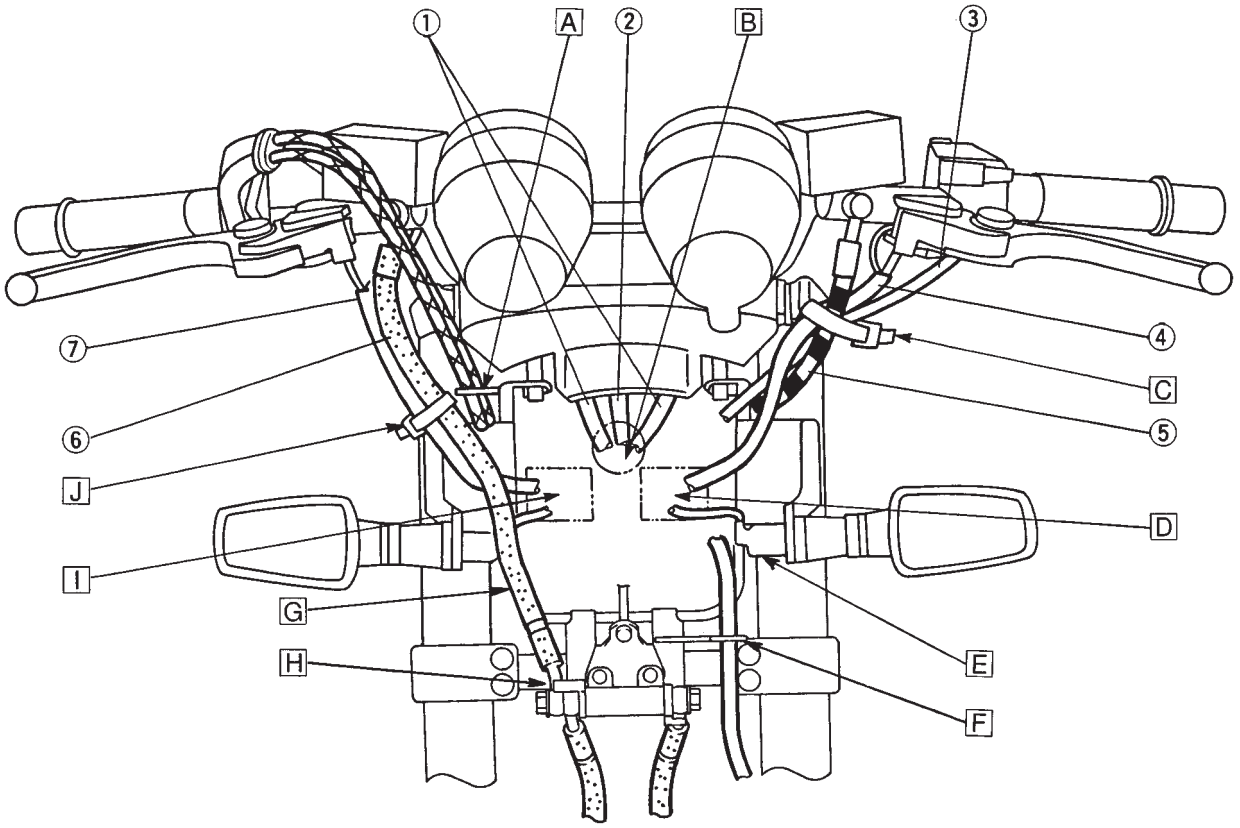

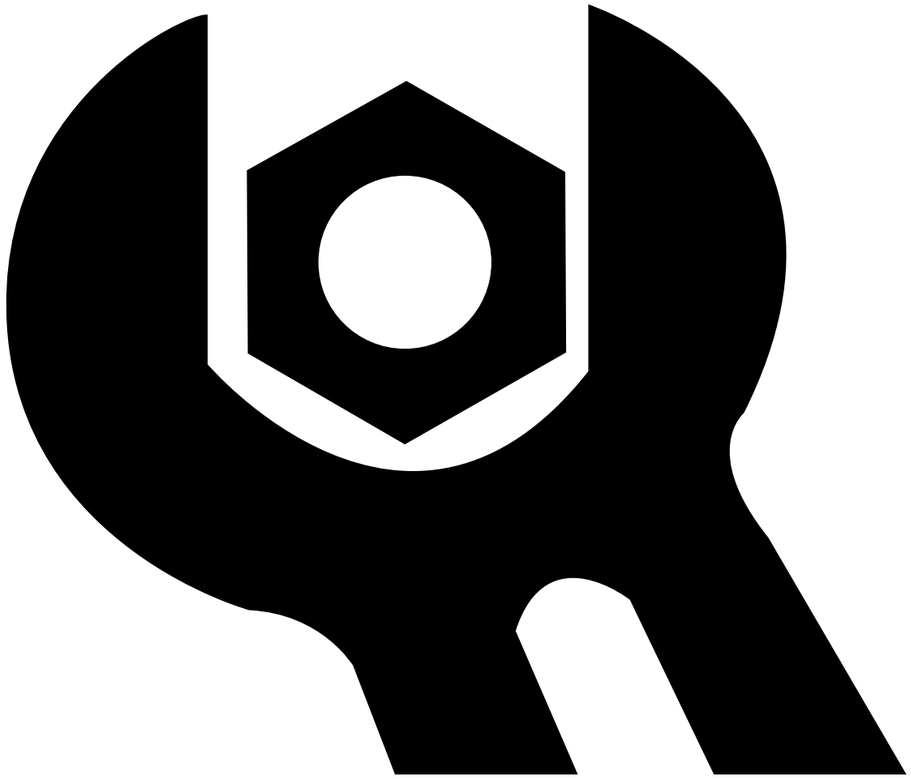

CHK
ADJ

3

CHAPTER 3.
PERIODIC INSPECTION AND ADJUSTMENT

INTRODUCTION 3-1

PERIODIC MAINTENANCE/LUBRICATION INTERVALS 3-1

SEAT SIDE COVER AND FUEL TANK 3-3

ENGINE 3-4
- ADJUSTING THE VALVE CLEARANCE 3-4
- SYNCHRONIZING THE CARBURETOR 3-9
- ADJUSTING THE IDLING SPEED 3-10
- ADJUSTING THE THROTTLE CABLE FREE PLAY 3-11
- CHECKING THE SPARK PLUGS 3-13
- CHECKING THE IGNITION TIMING 3-13
- MEASURING THE COMPRESSION PRESSURE 3-14
- CHECKING THE ENGINE OIL LEVEL 3-16
- CHECKING THE ENGINE OIL 3-17
- MEASURING THE ENGINE OIL PRESSURE 3-18
- ADJUSTING THE CLUTCH LEVER 3-19
- CHECKING THE CLUTCH FLUID LEVEL 3-20
- BLEEDING THE HYDRAULIC CLUTCH SYSTEM 3-20
- CLEANING THE AIR FILTER ELEMENT 3-22
- CHECKING THE CARBURETOR JOINTS AND INTAKE MANIFOLDS 3-23
- CHECKING THE FUEL AND VACUUM HOSES 3-23
- CHECKING THE CRANKCASE BREATHER HOSE 3-24
- CHECKING THE EXHAUST SYSTEM 3-24

CHASSIS 3-25
- ADJUSTING THE FRONT BRAKE 3-25
- ADJUSTING THE REAR BRAKE 3-25
- CHECKING THE BRAKE FLUID LEVEL 3-26
- CHECKING THE BRAKE PADS 3-27
- ADJUSTING THE REAR BRAKE LIGHT SWITCH 3-27
- BLEEDING THE HYDRAULIC BRAKE SYSTEM 3-28
- ADJUSTING THE SHIFT PEDAL 3-29
- ADJUSTING THE DRIVE CHAIN SLACK 3-29
- LUBRICATING THE DRIVE CHAIN 3-31
- CHECKING AND ADJUSTING THE STEERING HEAD 3-32
- CHECKING THE FRONT FORK 3-34
- ADJUSTING THE FRONT FORK LEGS 3-35
- ADJUSTING THE REAR SHOCK ABSORBER ASSEMBLIES 3-36
- CHECKING THE TIRES 3-37
- CHECKING THE WHEELS 3-39
- CHECKING AND LUBRICATING THE CABLES 3-40
- LUBRICATING THE LEVERS AND PEDALS 3-40

LUBRICATING THE SIDE STAND 3-40
LUBRICATING THE CENTERSTAND 3-40
LUBRICATING THE REAR SUSPENSION 3-40

ELECTRICAL SYSTEM 3-41
CHECKING AND CHARGING THE BATTERY 3-41
CHECKING THE FUSES 3-46
REPLACING THE HEADLIGHT BULB 3-48
ADJUSTING THE HEADLIGHT BEAM 3-49

PERIODIC INSPECTION AND ADJUSTMENT

INTRODUCTION

This chapter includes all information necessary to perform recommended inspections and adjustments. These preventive maintenance procedures, if followed, will ensure more reliable vehicle operation and a longer service life. The need for costly overhaul work will be greatly reduced. This information applies to vehicles already in service as well as new vehicles that are being prepared for sale. All service technicians should be familiar with this entire chapter.

PERIODIC MAINTENANCE/LUBRICATION INTERVALS

ITEM	REMARKS	BREAK-IN 1,000 km	EVERY 6,000 km or 6 months	EVERY 12,000 km or 12 months
Valves*	Check valve clearance. Adjust if necessary.	EVERY 24,000 km or 24 months		
Spark plugs	Check condition. Clean or replace of necessary.	○	○	○
Air filter	Clean. Replace if necessary.		○	○
Carburetor*	Check idle speed/synchronization/starter operation. Adjust if necessary.	○	○	○
Fuel line*	Check fuel hose for cracks or damage. Replace if necessary.		○	○
Fuel filter*	Check condition. Replace if necessary.			○
Engine oil	Replace (Warm engine before draining).	○	○	○
Engine oil filter*	Replace.	○		○
Brake*	Check operation/fluid leakage/See NOTE. Correct if necessary.		○	○
Clutch*	Check operation/fluid leakage/See NOTE. Correct if necessary.		○	○
Swingarm pivot*	Check swingarm assembly for looseness. Correct if necessary. Moderately repack every 24,000 km or 24 months.**			○
Rear suspension link pivots*	Check operation. Apply grease lightly every 24,000 km or 24 months.**			○
Wheels*	Check balance/damage/runout. Replace if necessary.		○	○
Wheel bearings*	Check bearing assembly for looseness/damage. Replace if damaged.		○	○
Steering bearings*	Check bearing assembly for looseness. Correct if necessary. Moderately repack every 24,000 km or 24 months.	○		○
Front forks*	Check operation/oil leakage. Repair if necessary.		○	○
Rear shock absorber*	Check operation/oil leakage. Repair if necessary.		○	○
Drive chain	Check chain free play/alignment. Adjust if necessary. Clean and lube.	EVERY 500 km		
Fittings/Fasteners*	Check all chassis fittings and fasteners. Correct if necessary.	○	○	○
Center and sidestand*	Check operation. Repair if necessary.	○	○	○
Sidestand switch*	Check operation. Clean or replace if necessary.	○	○	○
A.C. Generator*	Replace generator brushes every 100,000 km.			

*: It is recommended that these items be serviced by a Yamaha dealer.
**: Molybdenum disulfide grease.
***: Lithium soap base grease.

NOTE:

Brake fluid replacement:
1. When disassembling the master cylinder, caliper cylinder or clutch release cylinder, replace the brake fluid. Normally check the brake fluid level and add the fluid as required.
2. On the inner parts of the master cylinder, caliper cylinder and clutch release cylinder, replace the oil seals every two years.
3. Replace the brake and clutch hoses every four years, or if cracked or damaged.

SEAT, SIDE COVER AND FUEL TANK

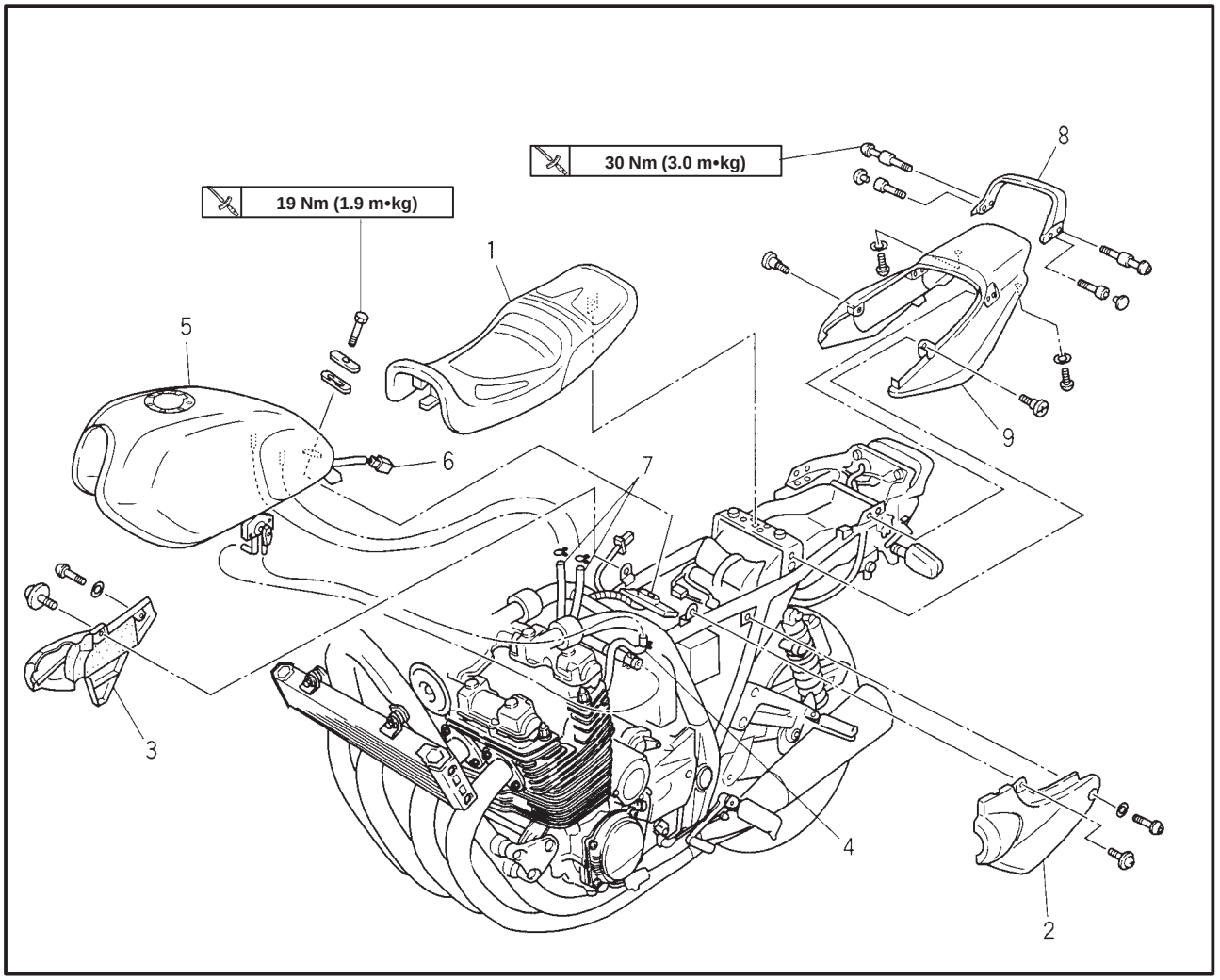

Order	Job/Part	Q'ty	Remarks
	Removing the seat, side cover and fuel tank		Remove the parts in the order listed.
1	Seat	1	
2	Side cover (left)	1	
3	Side cover (right)	1	
4	Fuel hose	1/1	**NOTE:** Disconnect the fuel pipe, set the fuel cock lever "ON" or "RES" position.
5	Fuel tank	1	
6	Fuel sender lead	1	
7	Drain hose	2	
8	Grab bar	1	
9	Rear fender cover	1	
			For installation, reverse the removal procedure.

ENGINE

ADJUSTING THE VALVE CLEARANCE

the following procedure applies to all of the valves.

NOTE:

- Valve clearance adjustment should be made on a cold engine, at room temperature.
- When the valve clearance is to be measured or adjusted, the piston must be at top dead center (TDC) on the compression stroke.

1. Remove:
   - seat
   - side covers
   - fuel tank

   Refer to “SEAT, SIDE COVER AND FUEL TANK”.

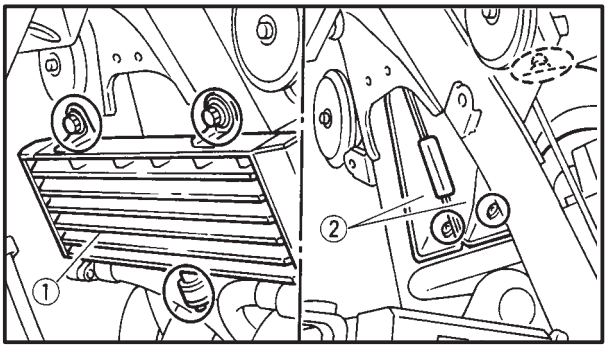

2. Remove:
   - oil cooler ①
   - air ducts ②

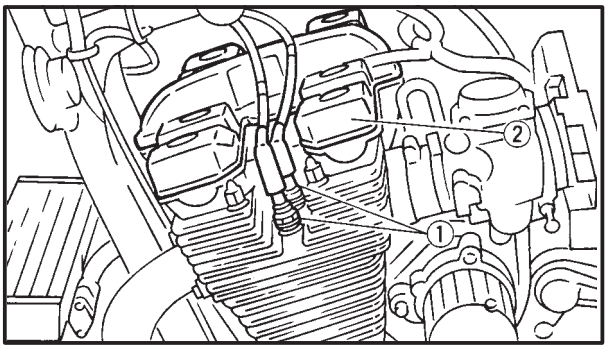

3. Remove:
   - spark plugs ①
   - cylinder head cover ②
   - timing plate cover ③

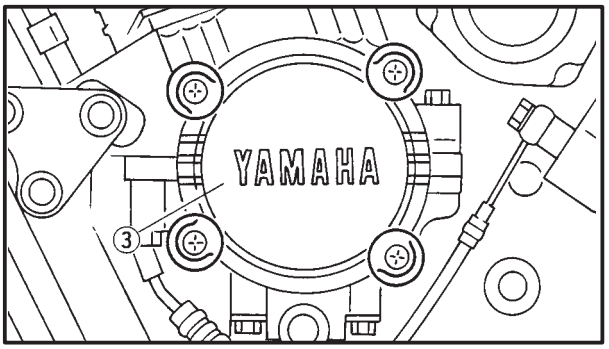

4. Measure:
   - valve clearance

   Out of specification → Adjust.

Valve clearance (cold):
Intake valve 0.11 ~ 0.15 mm
Exhaust valve 0.16 ~ 0.20 mm

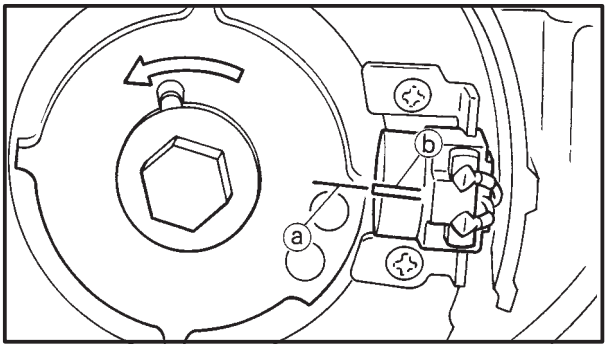

a. Turn the crankshaft counterclockwise.
b. When piston #1 is at TDC on the compression stroke, align the TDC mark ⓐ on the timing plate with the mark ⓑ on the pickup coil base plate.

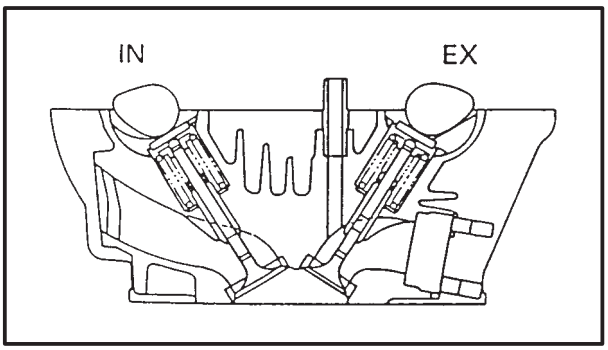

NOTE:

TDC on the compression stroke can be found when the camshaft lobes are turned away from each other.

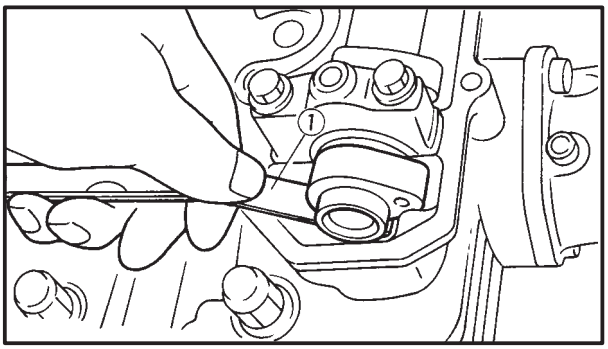

c. Measure the valve clearance with a thickness gauge ①.

NOTE:

- If the valve clearance is incorrect, record the measured reading.
- Measure the valve clearance in the following sequence.

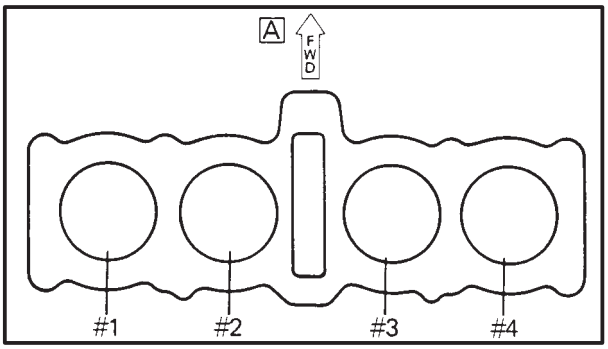

Valve clearance measuring sequence
Cylinder #1 → #2 → #4 → #3

A Front

d. For each cylinder, starting with cylinder #1 at TDC, turn the crankshaft counterclockwise as specified in the following table.

B Degrees that the crank shaft is turned counter clockwise

C Cylinder

D Combustion cycle

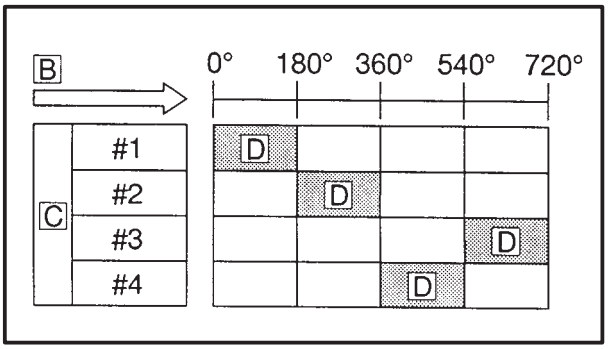

Cylinder #2	**180°**
Cylinder #4	**360°**
Cylinder #3	**540°**

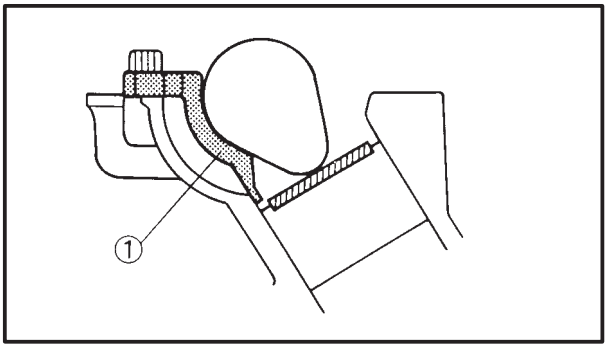

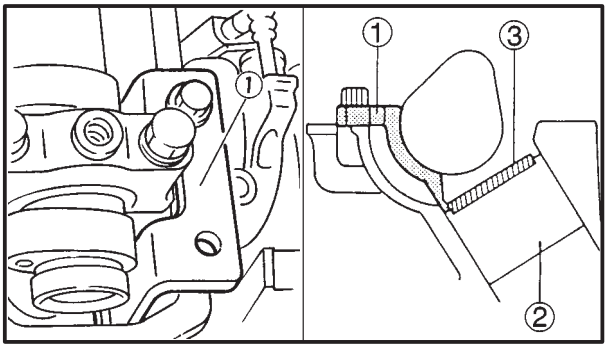

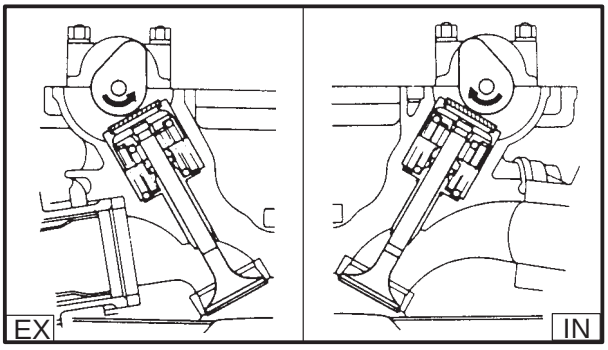

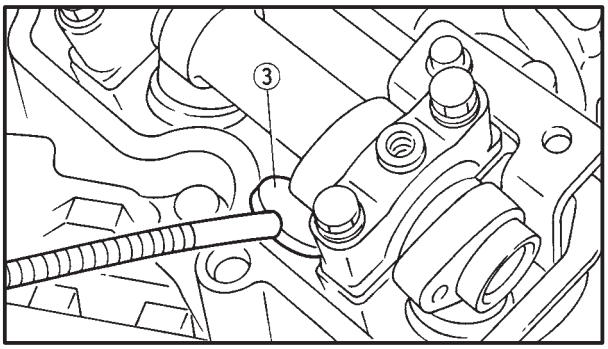

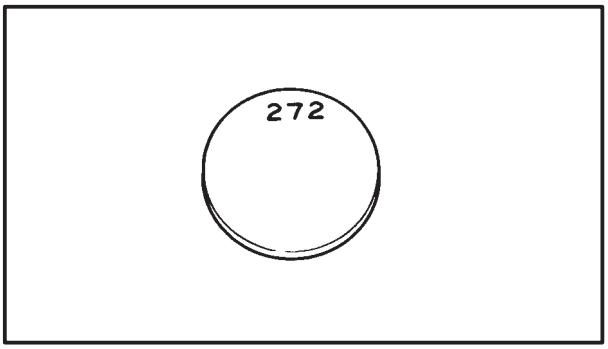

5. Adjust:
   - Valve clearance

▼▼▼▼▼▼▼▼▼▼▼▼▼▼▼▼▼▼▼▼▼▼▼▼▼▼▼▼▼▼▼▼

a. Align the intake and exhaust valve lifter slots with each other.
b. Slowly turn the crankshaft until the cam lifted at maximum.
c. Install the tappet adjusting tool ① as shown.

Tappet adjusting tool:
P/N 90890-04110

NOTE:

Make sure that the tappet adjusting tool touches only the valve lifter ②, not the valve pad ③.

d. Slowly turn the crankshaft so that the valve pad can be removed.
e. Remove the valve pad from the valve lifter with a small screwdriver and a pair of tweezers. Make a note of the position of each valve pad and valve pad number so they can be installed in the correct place.
f. Select the proper valve pad from the following table.

Valve pad thickness range		Available valve pads
No. 200 ~ No. 320	2.00 mm ~ 3.20 mm	25 thicknesses in 0.05 mm incre ments

NOTE:

- The thickness of each valve pad is marked in hundredths of millimeters on the side that touches the valve lifter (not the camshaft).
- Since valve pads of various sizes are originally installed, the valve pad number must be rounded in order to reach the closest equivalent to the original.

g. Round off the original valve pad number according to the following table.

INTAKE

MEASURED CLEARANCE	INSTALLED PAD NUMBER																								
	200	205	210	215	220	225	230	235	240	245	250	255	260	265	270	275	280	285	290	295	300	305	310	315	320
0.00 ~ 0.05			200	205	210	215	220	225	230	235	240	245	250	255	260	265	270	275	280	285	290	295	300	305	310
0.06 ~ 0.10		200	205	210	215	220	225	230	235	240	245	250	255	260	265	270	275	280	285	290	295	300	305	310	315
0.11 ~ 0.15	STANDARD CLEARANCE																								
0.16 ~ 0.20	205	210	215	220	225	230	235	240	245	250	255	260	265	270	275	280	285	290	295	300	305	310	315	320	
0.21 ~ 0.25	210	215	220	225	230	235	240	245	250	255	260	265	270	275	280	285	290	295	300	305	310	315	320		
0.26 ~ 0.30	215	220	225	230	235	240	245	250	255	260	265	270	275	280	285	290	295	300	305	310	315	320			
0.31 ~ 0.35	220	225	230	235	240	245	250	255	260	265	270	275	280	285	290	295	300	305	310	315	320				
0.36 ~ 0.40	225	230	235	240	245	250	255	260	265	270	275	280	285	290	295	300	305	310	315	320					
0.41 ~ 0.45	230	235	240	245	250	255	260	265	270	275	280	285	290	295	300	305	310	315	320						
0.46 ~ 0.50	235	240	245	250	255	260	265	270	275	280	285	290	295	300	305	310	315	320							
0.51 ~ 0.55	240	245	250	255	260	265	270	275	280	285	290	295	300	305	310	315	320								
0.56 ~ 0.60	245	250	255	260	265	270	275	280	285	290	295	300	305	310	315	320									
0.61 ~ 0.65	250	255	260	265	270	275	280	285	290	295	300	305	310	315	320										
0.66 ~ 0.70	255	260	265	270	275	280	285	290	295	300	305	310	315	320											
0.71 ~ 0.75	260	265	270	275	280	285	290	295	300	305	310	315	320												
0.76 ~ 0.80	265	270	275	280	285	290	295	300	305	310	315	320													
0.81 ~ 0.85	270	275	280	285	290	295	300	305	310	315	320														
0.86 ~ 0.90	275	280	285	290	295	300	305	310	315	320															
0.91 ~ 0.95	280	285	290	295	300	305	310	315	320																
0.96 ~ 1.00	285	290	295	300	305	310	315	320																	
1.01 ~ 1.05	290	295	300	305	310	315	320																		
1.06 ~ 1.10	295	300	305	310	315	320																			
1.11 ~ 1.15	300	305	310	315	320																				
1.16 ~ 1.20	305	310	315	320																					
1.21 ~ 1.25	310	315	320																						
1.26 ~ 1.30	315	320																							
1.31 ~ 1.35	320																								

VALVE CLEARANCE (cold):
0.11 ~ 0.15 mm
Example: Installed is 250
Measured clearance is 0.23 mm
Replace 250 pad with 260 pad
Pad number: (example)
Pad No. 250 = 2.50 mm
Pad No. 260 = 2.60 mm
Always install pad with number down.

EXHAUST

MEASURED CLEARANCE	INSTALLED PAD NUMBER																								
	200	205	210	215	220	225	230	235	240	245	250	255	260	265	270	275	280	285	290	295	300	305	310	315	320
0.00 ~ 0.05				200	205	210	215	220	225	230	235	240	245	250	255	260	265	270	275	280	285	290	295	300	305
0.06 ~ 0.10			200	205	210	215	220	225	230	235	240	245	250	255	260	265	270	275	280	285	290	295	300	305	310
0.11 ~ 0.15		200	205	210	215	220	225	230	235	240	245	250	255	260	265	270	275	280	285	290	295	300	305	310	315
0.16 ~ 0.20	STANDARD CLEARANCE																								
0.21 ~ 0.25	205	210	215	220	225	230	235	240	245	250	255	260	265	270	275	280	285	290	295	300	305	310	315	320	
0.26 ~ 0.30	210	215	220	225	230	235	240	245	250	255	260	265	270	275	280	285	290	295	300	305	310	315	320		
0.31 ~ 0.35	215	220	225	230	235	240	245	250	255	260	265	270	275	280	285	290	295	300	305	310	315	320			
0.36 ~ 0.40	220	225	230	235	240	245	250	255	260	265	270	275	280	285	290	295	300	305	310	315	320				
0.41 ~ 0.45	225	230	235	240	245	250	255	260	265	270	275	280	285	290	295	300	305	310	315	320					
0.46 ~ 0.50	230	235	240	245	250	255	260	265	270	275	280	285	290	295	300	305	310	315	320						
0.51 ~ 0.55	235	240	245	250	255	260	265	270	275	280	285	290	295	300	305	310	315	320							
0.56 ~ 0.60	240	245	250	255	260	265	270	275	280	285	290	295	300	305	310	315	320								
0.61 ~ 0.65	245	250	255	260	265	270	275	280	285	290	295	300	305	310	315	320									
0.66 ~ 0.70	250	255	260	265	270	275	280	285	290	295	300	305	310	315	320										
0.71 ~ 0.75	255	260	265	270	275	280	285	290	295	300	305	310	315	320											
0.76 ~ 0.80	260	265	270	275	280	285	290	295	300	305	310	315	320												
0.81 ~ 0.85	265	270	275	280	285	290	295	300	305	310	315	320													
0.86 ~ 0.90	270	275	280	285	290	295	300	305	310	315	320														
0.91 ~ 0.95	275	280	285	290	295	300	305	310	315	320															
0.96 ~ 1.00	280	285	290	295	300	305	310	315	320																
1.01 ~ 1.05	285	290	295	300	305	310	315	320																	
1.06 ~ 1.10	290	295	300	305	310	315	320																		
1.11 ~ 1.15	295	300	305	310	315	320																			
1.16 ~ 1.20	300	305	310	315	320																				
1.21 ~ 1.25	305	310	315	320																					
1.26 ~ 1.30	310	315	320																						
1.31 ~ 1.35	315	320																							
1.36 ~ 1.40	320																								

VALVE CLEARANCE (cold):
0.16 ~ 0.20 mm
Example: Instaled is 250
Measured clearance is 0.32 mm
Replace 250 pad with 265 pad
Pad number: (example)
Pad No. 250 = 2.50 mm
Pad No. 265 = 2.65 mm
Always install pad with number down.

EXAMPLE:
Original valve pad number = 248 (thickness = 2.48 mm (0.098 in))
Rounded value = 250

h. Locate the rounded number of the original valve pad and the measured valve clearance in the valve pad selection table.
   The point where the column and row intersect is the new valve pad number.

NOTE:

The new valve pad number is only an approximation. The valve clearance must be measured again and the above steps should be repeated if the measurement is still incorrect.

i. Install the new valve pad with the numbered side facing down.
j. Remove the tappet adjusting tool.

INTAKE
EXHAUST

k. Measure the valve clearance again.
i. If the valve clearance is still out of specification, repeat al of the valve clearance adjustment steps until the specified clearance is obtained.

▲▲▲▲▲▲▲▲▲▲▲▲▲▲▲▲▲▲▲▲▲▲▲▲▲▲▲▲▲▲▲▲

6. Install:
   - all removed parts

NOTE:

For installation, reverse the removal procedure. Note the following points.

7. Install:
   - fuel tank
   - side covers
   - seat
     Refer to “SEAT, SIDE COVER AND FUEL TANK”.

EAS00050

SYNCHRONIZING THE CARBURETORS

NOTE:

Prior to synchronizing the carburetors, the valve clearance and the engine idling speed should be properly adjusted and the ignition timing should be checked.

1. Stand the motorcycle on a level surface.

NOTE:

Place the motorcycle on a suitable stand.

2. Remove:
   - side covers
   - seat
   - fuel tank

   Refer to “SEAT, SIDE COVER AND FUEL TANK”.

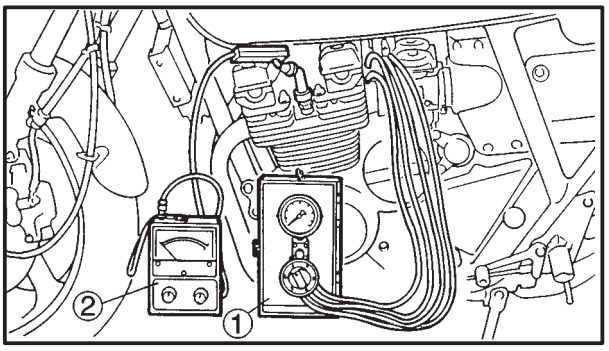

3. Install:
   - vacuum gauge ①
   - engine tachometer ②

   (to the spark plug lead of cyl. #1)

	Vacuum gauge **90890-03094** **Engine tachometer** **90890-03113**

4. Start the engine and let it warm up for several minutes.
5. Check:
   - engine idling speed

   Out of specification → Adjust.
   Refer to “ADJUSTING THE ENGINE IDLING SPEED”.

	Engine idling speed: **1,000 ~ 1,100 r/min**

6. Adjust:
   - carburetor synchronization

▼▼▼▼▼▼▼▼▼▼▼▼▼▼▼▼▼▼▼▼▼▼▼▼▼▼▼▼▼▼▼▼▼▼

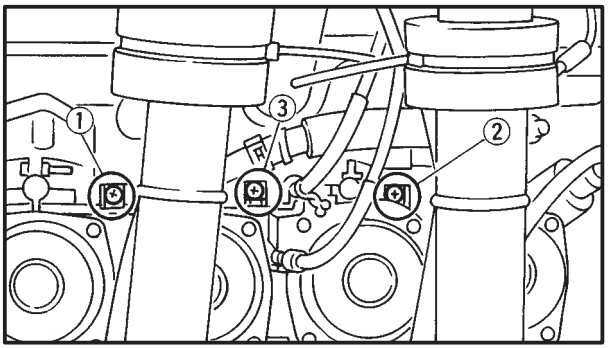

a. Synchronize carburetor #1 to carburetor #2 by turning the synchronizing screw ① in either direction until both gauges read the same.

NOTE:

After each step, rev the engine two or three times, each time for less than a second, and check the synchronization again.

b. Synchronize carburetor #4 to carburetor #3 by turning the synchronizing screw ② in either direction until both gauges read the same.
c. Synchronize carburetor #2 to carburetor #3 by turning the synchronizing screw ③ in either direction until both gauges read the same.

Vacuum pressure at engine idling speed:
31.3 kPa (235 mm Hg)

NOTE:

The difference in vacuum pressure between two carburetors should not exceed 1.33 kPa (10 mm Hg, 0.4 in Hg).

7. Check:
   - engine idling speed
     Out of specification → Adjust.
8. Stop the engine and remove the measuring equipment.
9. Adjust:
   - throttle cable free play
     Refer to “ADJUSTING THE THROTTLE CABLE FREE PLAY”.

Throttle cable free play (at the throttle grip):
3 ~ 5 mm

10. Install:
    - fuel tank
    - seat
    - side covers
      Refer to “SEAT, SIDE COVER AND FUEL TANK”.

EAS00054

ADJUSTING THE ENGINE IDLING SPEED

NOTE:

Prior to adjusting the engine idling speed, the carburetor synchronization should be adjusted properly, the air filter should be clean, and the engine should have adequate compression.

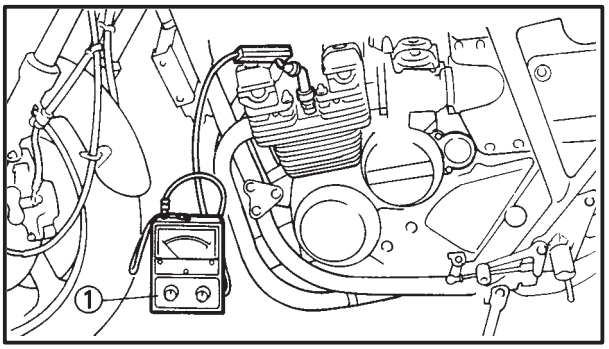

1. Start the engine and let it warm up for several minutes.
2. Install:
   - engine tachometer ①
     (to the spark plug lead of cyl. #1)

Engine tachometer
90890-03113

3. Measure:
   - engine idling speed
     Out of specification → Adjust.

Engine idling speed
1,000 ~ 1,100 r/min

4. Adjust:
   - engine idling speed

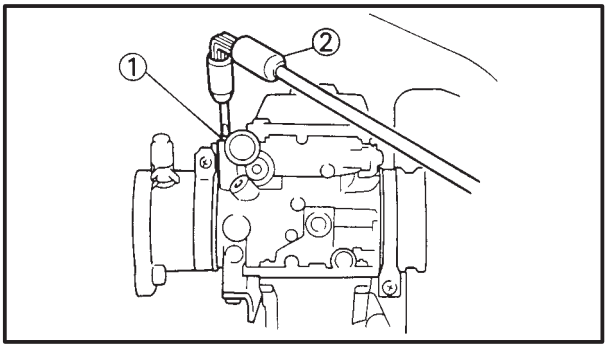

a. Turn the pilot screw ① in or out until it is lightly seated.
b. Turn the pilot screw out the specified number of turns.

Carburetor angle driver ②
90890-03158

Pilot screw
1–1/2 turns out

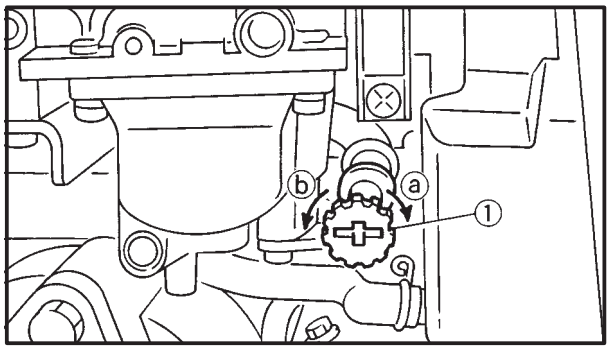

c. Turn the throttle stop screw ① in direction ⓐ or ⓑ until the specified engine idling speed is obtained.

Direction ⓐ	**Engine idling speed is increased.**
Direction ⓑ	**Engine idling speed is decreased.**

5. Adjust:
   - throttle cable free play
     Refer to "ADJUSTING THE THROTTLE CABLE FREE PLAY".

Throttle cable free play (at the flange of the throttle grip)
3 ~ 5 mm

EAS00055

ADJUSTING THE THROTTLE CABLE FREE PLAY

NOTE:

Prior to adjusting the throttle cable free play, the engine idling speed and carburetor synchronization should be adjusted properly.

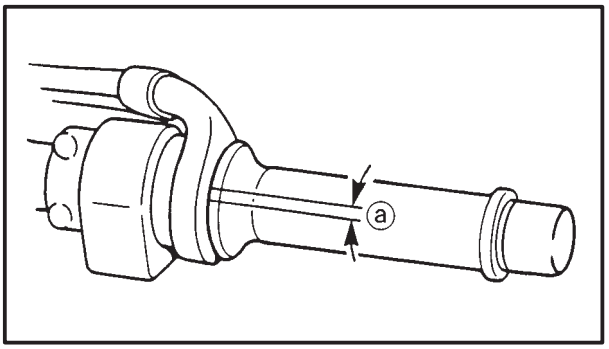

1. Check:
   - throttle cable free play ⓐ
     Out of specification → Adjust.

Throttle cable free play (at the flange of the throttle grip)
3 ~ 5 mm

2. Remove:
   - seat
   - fuel tank
   Refer to “SEAT, SIDE COVER AND FUEL TANK”.
3. Adjust:
   - throttle cable free play

NOTE:

When the motorcycle is accelerating, the accelerator cable ① is pulled.

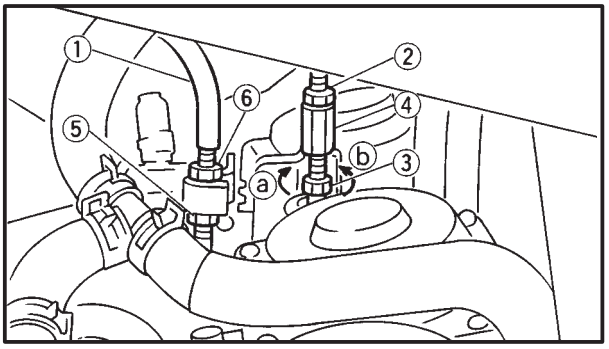

Carburetor side

a. Loosen the locknut ② ③ on the decelerator cable.
b. Turn the adjusting nut ④ in direction ⓐ or ⓑ to take up any slack on the decelerator cable.
c. Loosen the locknut ⑤ on the accelerator cable.
d. Turn the adjusting nut ⑥ in direction ⓐ or ⓑ until the specified throttle cable free play is obtained.

Direction ⓐ	**Throttle cable free play is increased.**
Direction ⓑ	**Throttle cable free play is decreased.**

e. Tighten the locknuts.

NOTE:

If the specified throttle cable free play cannot be obtained on the carburetor side of the cable, use the adjusting nut on the handlebar side.

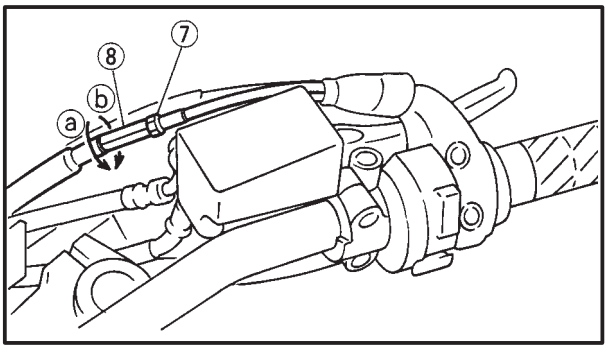

Handlebar side

a. Loosen the locknut ⑦.
b. Turn the adjusting nut ⑧ in direction ⓐ or ⓑ until the specified throttle cable free play is obtained.

Direction ⓐ	**Throttle cable free play is increased.**
Direction ⓑ	**Throttle cable free play is decreased.**

c. Tighten the locknut.

⚠ WARNING

After adjusting the throttle cable free play, turn the handlebar to the right and to the left to ensure that this does not cause the engine idling speed to change.

4. Install:
   - fuel tank
   - seat
   Refer to “SEAT, SIDE COVER AND FUEL TANK”.

EAS00059
CHECKING THE SPARK PLUGS

The following procedure applies to all of the spark plugs.

1. Disconnect:
   - spark plug cap
2. Remove:
   - spark plug

CAUTION:

Before removing the spark plugs, blow away any dirt accumulated in the spark plug wells with compressed air to prevent it from falling into the cylinders.

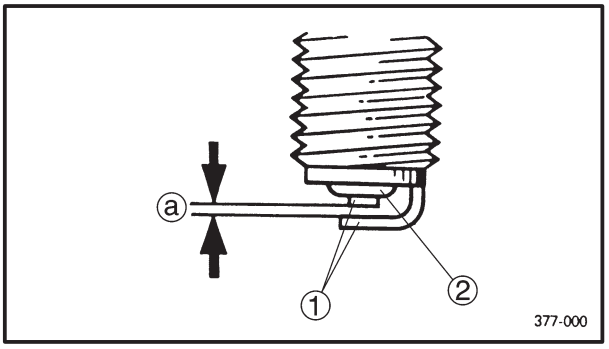

3. Check:
   - spark plug type
     Incorrect → Change.

Spark plug type (manufacturer)
DPR8EA-9 (NGK)
X24EPR-U9 (DENSO)

4. Check
   - electrode ①
     Damage/wear → Replace the spark plug.
   - insulator ②
     Abnormal color → Replace the spark plug.
     Normal color is a medium-to-light tan color.
5. Clean:
   - spark plug
     (with a spark plug cleaner or wire brush)
6. Measure:
   - spark plug gap ⓐ
     (with a wire gauge)
     Out of specification → Regap.

Spark plug gap
0.8 ~ 0.9 mm

7. Install:
   - spark plug

Spark plug
18 Nm (1.8 m•kg)

NOTE:

Before installing the spark plug clean the spark plug and gasket surface.

8. Connect:
   - spark plug cap

EAS00063
CHECKING THE IGNITION TIMING

NOTE:

Prior to checking the ignition timing, check the wiring connections of the entire ignition system. Make sure that all connections are tight and free of corrosion.

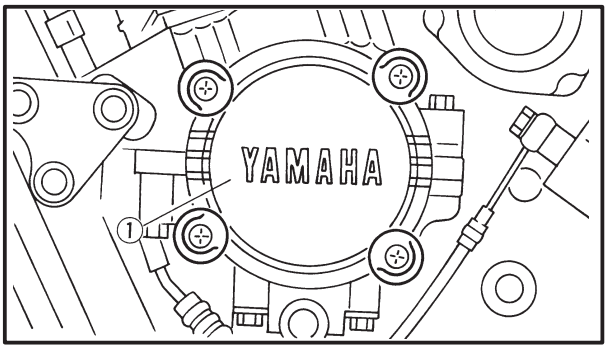

1. Remove:
   - timing plate cover ①

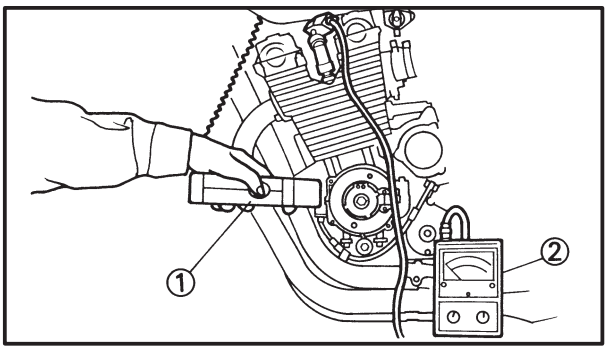

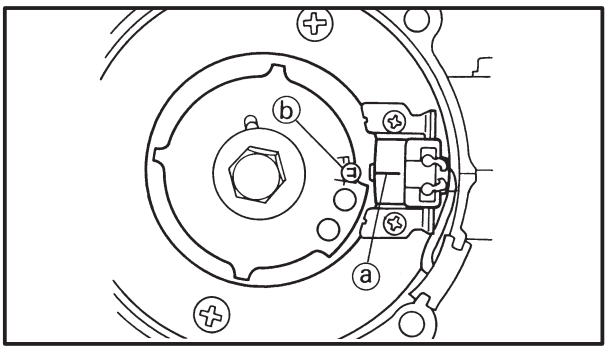

2. Install:
   - timing light ①
   - engine tachometer ②
   (to the spark plug lead of cyl. #1)

Timing light
90890-03141
Engine tachometer
90890-03113

3. Check:
   - ignition timing

a. Start the engine, warm it up for several minutes, and then let it run at the specified engine idling speed.

Engine idling speed
1,000 ~ 1,100 r/min

b. Check that the pickup coil ⓐ is within the firing range ⓑ on th timing plate.
   Incorrect firing range → Check the ignition system.

NOTE:
The ignition timing is not adjustable.

4. Remove:
   - engine tachometer
   - timing light
5. Install:
   - timing plate cover

Timing plate cover bolt:
7 Nm (0.7 m•kg)
LOCTITE®

EAS00065

MEASURING THE COMPRESSION PRESSURE

The following procedure applies to all of the cylinders.

NOTE:
Insufficient compression pressure will result in a loss of performance.

1. Check:
   - valve clearance
   Out of specification → Adjust.
   Refer to “ADJUSTING THE VALVE CLEARANCE”.
2. Start the engine, warm it up for several minutes, and then turn it off.

MEASURING THE COMPRESSION PRESSURE

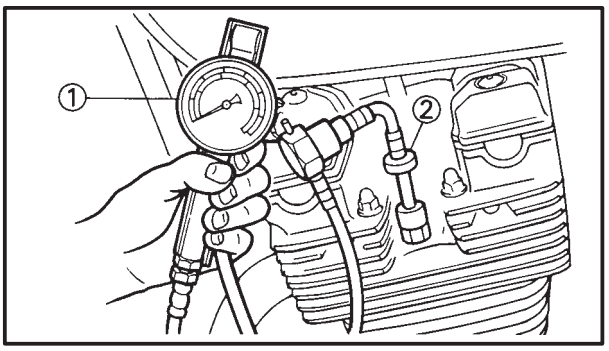

3. Disconnect:
   - spark plug cap
4. Remove:
   - spark plug

CAUTION:

Before removing the spark plugs, use compressed air to blow away any dirt accumulated in the spark plug wells to prevent it from falling into the cylinders.

5. Install:
   - compression gauge ①
   - adapter ②

Compression gauge
90890-03081
Adapter
90890-04082

6. Measure:
   - compression pressure
     Above the maximum pressure → Inspect the cylinder head, valve surfaces, and piston crown for carbon deposits.
     Below the minimum pressure → Squirt a few drops of oil into the affected cylinder and measure again.
   - Refer to the following table.

Compression pressure (With oil applied into cylinder)	
Reading	**Diagnosis**
Higher than without oil	**Piston wear or damage → Repair.**
Same as without oil	**Piston ring(-s), valves, cylinder head gasket or piston possibly defective → Repair.**

Compression pressure (at sea level)

Compression pressure (at sea level):
Standard:
1,050 kPa (10.5 kg/cm^2, 10.5 bar)/400 r/min.
Minimum:
900 kPa (9.0 kg/cm^2, 9.0 bar)/400 r/min.
Maximum:
1,200 kPa (12.0 kg/cm^2, 12.0 bar)/400 r/min.

a. Turn the main switch to “ON”.
b. With the throttle wide open, crank the engine until the reading on the compression gauge stabilizes.

WARNING

To prevent sparking, ground all spark plug leads before cranking the engine.

NOTE:

The difference in compression pressure between cylinders should not exceed 100 kPa (1 kg/cm^2, 1 bar).

7. Install:
   - spark plug

	Spark plug **18 Nm (1.8 m•kg)**

8. Connect:
   - spark plug cap

EAS00069

CHECKING THE ENGINE OIL LEVEL

1. Stand the motorcycle on a level surface.

NOTE:

- Place the motorcycle on a suitable stand.
- Make sure that the motorcycle is upright.

2. Let the engine idle for a few minutes, and then stop it.
3. Check:
   - engine oil level
     The engine oil level should be between the minimum level marks ⓐ and maximum level marks ⓑ.
     Below the minimum level mark → Add the recommended engine oil to the proper level.

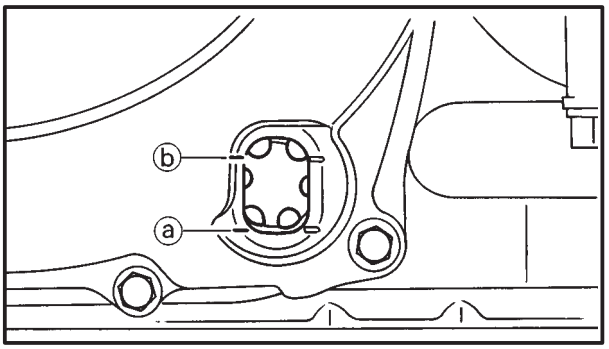

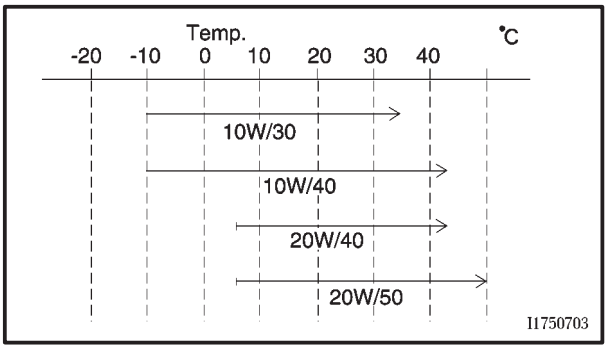

	Recommended engine oil **Refer to the chart for the engine oil grade which is best suited for certain atmospheric temperatures.** **API standard** **SE or higher grade** **ACEA standard** **G4 or G5**

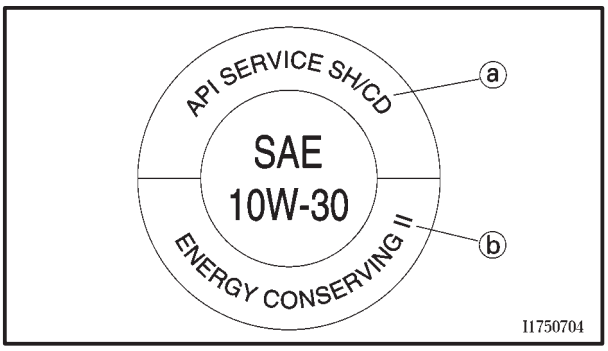

CAUTION:

- **Engine oil also lubricates the clutch and the wrong oil types or additives could cause clutch slippage. Therefore, do not add any chemical additives or use engine oils with a grade of CD ⓐ or higher and do not use oils labeled "ENERGY CONSERVING II" ⓑ or higher.**
- **Do not allow foreign materials to enter the crankcase.**

4. Start the engine, warm it up for several minutes, and then turn it off.
5. Check the engine oil level again.

NOTE:

Before checking the engine oil level, wait a few minutes until the oil has settled.

EAS00075

CHANGING THE ENGINE OIL

1. Start the engine, warm it up for several minutes, and then turn it off.
2. Place a container under the engine oil drain bolt.
3. Remove:
   - engine oil filler cap
   - engine oil drain bolt ①
4. Drain:
   - engine oil
     (completely from the crankcase)
5. If the oil filter element is also to be replaced, perform the following procedure.

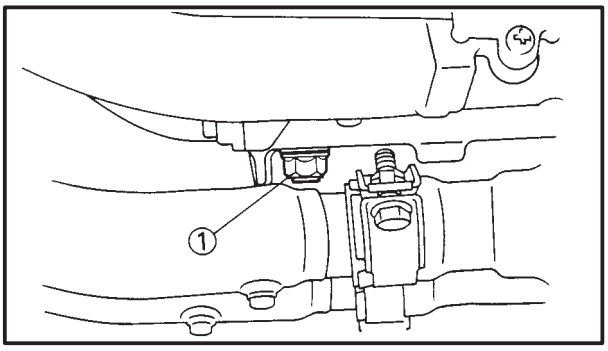

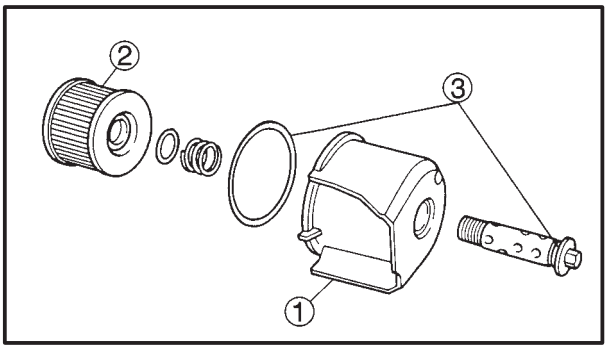

a. Remove the oil filter element cover ① and oil filter element ②.
b. Check the O-ring ③ and replace it of it is cracked or damage.
c. Install the new oil filter element and the oil filter element cover.

	Oil filter element cover bolt **15 Nm (1.5 m•kg)**

6. Check:
   - engine oil drain bolt gasket
     Damage → Replace.
7. Install:
   - engine oil drain bolt

	Engine oil drain bolt **43 Nm (4.3 m•kg)**

8. Fill:
   - crankcase
     (with the specified amount of the recommended engine oil)

Quantity
Total amount
4.2 L
Without oil filter element replacement
3 L
With oil filter element replacement
3.35 L

9. Install:
   - engine oil filler cap
10. Start the engine, warm it up for several minutes, and then turn it off.
11. Check;
    - engine
      (for engine oil leaks)
12. Check:
    - engine oil level
      Refer to “CHECKING THE ENGINE OIL LEVEL”.

EAS00077

MEASURING THE ENGINE OIL PRESSURE

1. Check:
   - engine oil level
     Below the minimum level mark → Add the recommended engine oil to the proper level.
2. Start the engine, warm it up for several minutes, and then turn it off.

CAUTION:

When the engine is cold, the engine oil will have a higher viscosity, causing the engine oil pressure to increase. Therefore, be sure to measure the engine oil pressure after warming up the engine.

3. Remove:
   - main gallery bolt

WARNING

The engine, muffler and engine oil are extremely hot.

4. Install:
   - oil pressure gauge ①
   - oil pressure adapter B ②

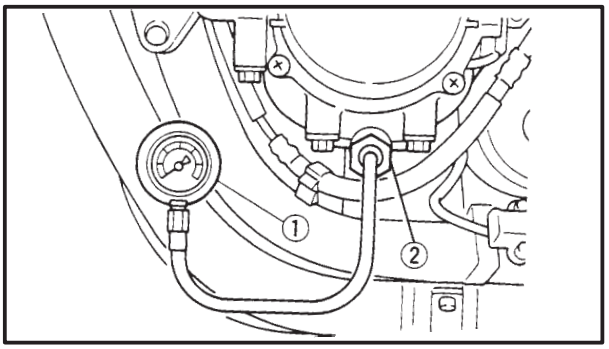

Oil pressure gauge
90890-03153
Oil pressure adapter B
90890-03124

5. Measure:
   - engine oil pressure
     (at the following conditions)

Engine oil pressure
80 kPa (0.8 kg/cm^2, 0.8 bar)
Engine speed
Approx. 1000 r/min
Engine oil temperature
70 ~ 80°C (158 ~ 176°F)

Out of specification → Adjust.

Engine oil pressure	Possible causes
Below specification	Faulty oil pump Clogged oil filter Leaking oil passage Broken or damaged oil seal
Above specification	Leaking oil passage Faulty oil filter Oil viscosity too high

6. Install:
   - main gallery bolt

Main gallery bolt
12 Nm (1.2 m•kg)

EAS00082

ADJUSTING THE CLUTCH LEVER

1. Adjust:
   - clutch lever position
     (distance ⓐ from the handlebar grip to the clutch lever)

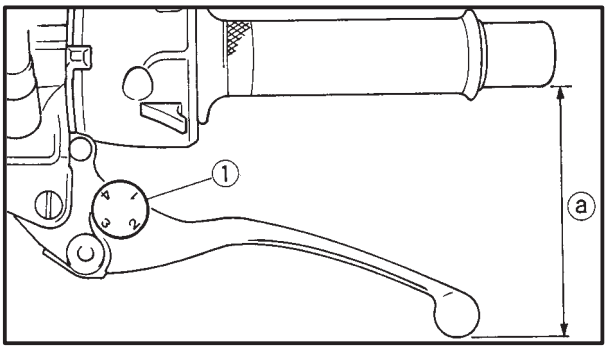

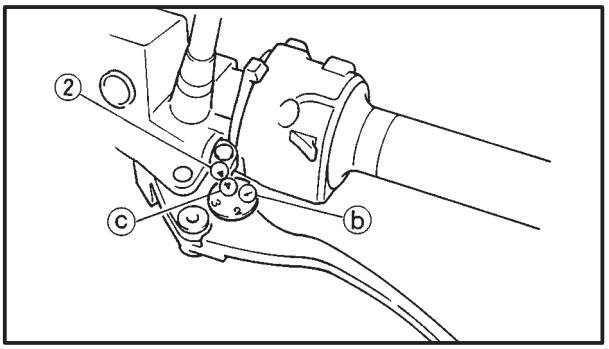

a. While pushing the clutch lever forward, turn the adjusting dial ① until the clutch lever is in the desired position.

NOTE:

Be sure to align the setting on the adjusting dial with the arrow mark ② on the clutch lever holder.

Position #1 ⓑ	**Distance ⓐ is the largest**
Position #4 ⓒ	**Distance ⓐ is the smallest**

WARNING

After adjusting the clutch lever position, make sure that the pin on the clutch lever holder is firmly inserted in the hole in the adjusting dial.

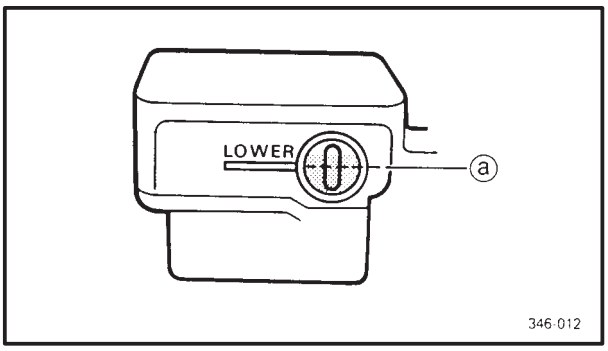

EAS00083

CHECKING THE CLUTCH FLUID LEVEL

1. Stand the motorcycle on a level surface.

NOTE:

Place the motorcycle on a suitable stand.

2. Check:
   - clutch fluid level
     Below the minimum level mark ⓐ → Add the recommended clutch fluid to the proper level.

Recommended clutch fluid
Brake fluid DOT 4

WARNING

- **Use only the designated clutch fluid. Other clutch fluids may cause the rubber seals to deteriorate, causing leakage and poor clutch performance.**
- **Refill with the same type of clutch fluid that is already in the system. Mixing clutch fluids may result in a harmful chemical reaction, leading to poor clutch performance.**
- **When refilling, be careful that water does not enter the reservoir. Water will significantly lower the boiling point of the clutch fluid and could cause vapor lock.**

CAUTION:

Clutch fluid may damage painted surfaces or plastic parts. Therefore, always clean up any spilt clutch fluid immediately.

NOTE:

In order to ensure a correct reading of the clutch fluid level, make sure that the top of the reservoir is horizontal.

EAS00084

BLEEDING THE HYDRAULIC CLUTCH SYSTEM

WARNING

Bleed the hydraulic clutch system whenever:
- **the system was disassembled,**
- **a clutch hose was loosened or removed,**
- **the clutch fluid level is very low,**
- **clutch operation is faulty.**

BLEEDING THE HYDRAULIC CLUTCH SYSTEM

NOTE:

- Be careful not to spill any clutch fluid or allow the clutch master cylinder reservoir to overflow.
- When bleeding the hydraulic clutch system, make sure that there is always enough clutch fluid before applying the clutch lever. Ignoring this precaution could allow air to enter the hydraulic clutch system, considerably lengthening the bleeding procedure.
- If bleeding is difficult, it may be necessary to let the clutch fluid settle for a few hours. Repeat the bleeding procedure when the tiny bubbles in the hose have disappeared.

1. Bleed:
   - hydraulic clutch system

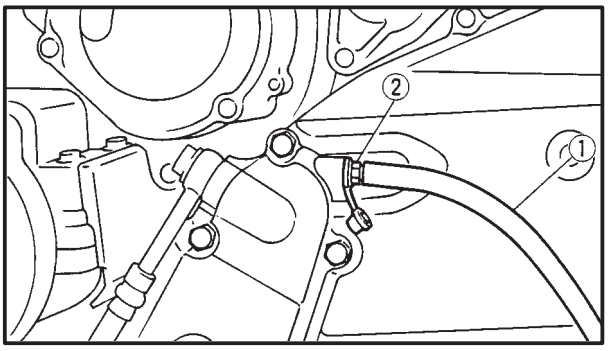

a. Add the recommended clutch fluid to the proper level.
b. Install the clutch master cylinder reservoir diaphragm.
c. Connect a clear plastic hose ① tightly to the bleed screw ②.
d. Place the other end of the hose into a container.
e. Slowly squeeze the clutch lever several times.
f. Fully squeeze the clutch lever without releasing it.
g. Loosen the bleed screw.
   This will release the tension and cause the clutch lever to contact the handlebar grip.
h. Tighten the bleed screw and then release the clutch lever.
i. Repeat steps (e) to (h) until all of the air bubbles have disappeared from the clutch fluid in the plastic hose.
j. Tighten the bleed screw to specification.

	Bleed screw **6 Nm (0.6 m•kg)**

k. Add the recommended clutch fluid to the proper level.
   Refer to “CHECKING THE CLUTCH FLUID LEVEL”.

⚠ WARNING

After bleeding the hydraulic clutch system, check the clutch operation.

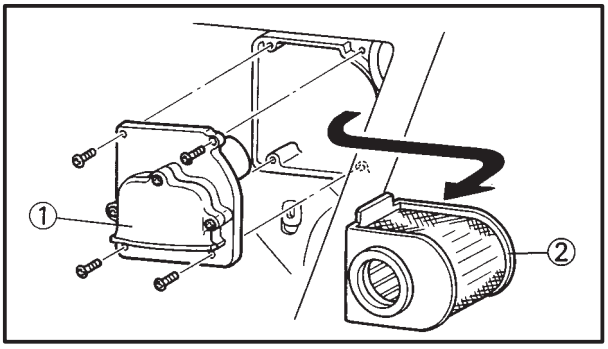

EAS00087

CLEANING THE AIR FILTER ELEMENT

1. Remove:
   - side cover (right)
     Refer to “SEAT, SIDE COVER AND FUEL TANK”.
   - air filter case cover ①
2. Remove:
   - air filter element ②

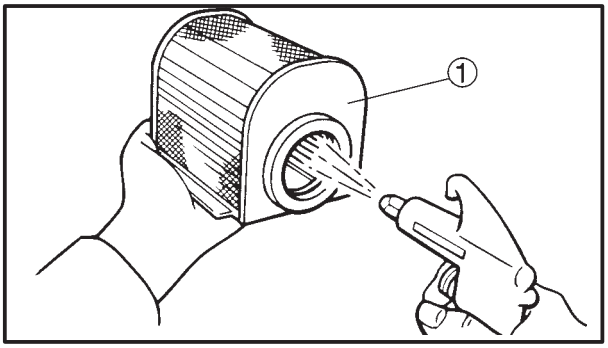

3. Clean:
   - air filter element ①
     Apply compressed air to the inner surface of the air filter element.

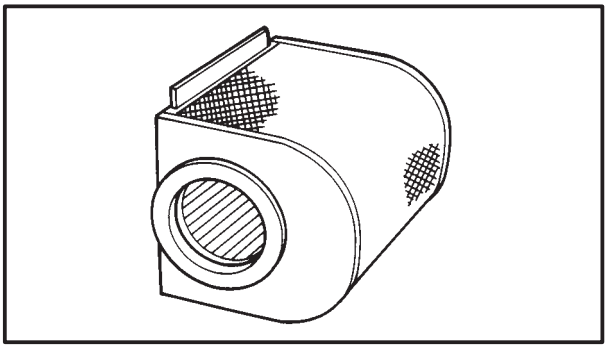

4. Check:
   - air filter element
     Damage → Replace.
5. Install:
   - air filter element
   - air filter case cover
     (along with the gasket)

CAUTION:

Never operate the engine without the air filter element installed. Unfiltered air will cause rapid wear of engine parts and may damage the engine. Operating the engine without the air filter element will also affect the carburetor tuning, leading to poor engine performance and possible overheating.

NOTE:

Make sure that the air filter element is properly installed in the air filter case.

6. Install:
   - side cover (right)
     Refer to “SEAT, SIDE COVER AND FUEL TANK”.

EAS00095

CHECKING THE CARBURETOR JOINTS AND INTAKE MANIFOLDS

The following procedure applies to all of the carburetor joints and intake manifolds.

1. Remove:
   - seat
   - side cover
   - fuel tank

   Refer to “SEAT, SIDE COVER AND FUEL TANK”.

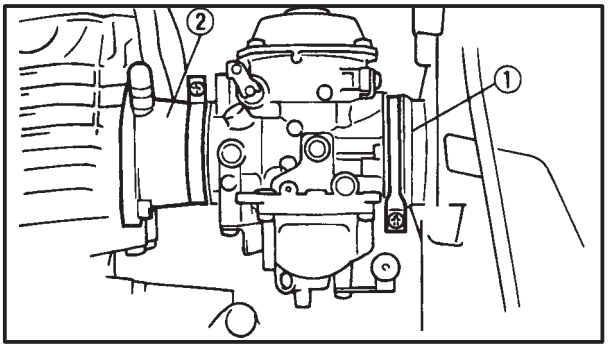

2. Check:
   - carburetor joint ①
   - intake manifold ②

   Cracks/damage → Replace.
   Refer to “CARBURETOR” in chapter 6.
3. Install:
   - fuel tank
   - side cover
   - seat

   Refer to “SEAT, SIDE COVER AND FUEL TANK”.

EAS00096

CHECKING THE FUEL AND VACUUM HOSES

The following procedure applies to all of the fuel and vacuum hoses.

1. Remove:
   - seat
   - fuel tank

   Refer to “SEAT, SIDE COVER AND FUEL TANK”.

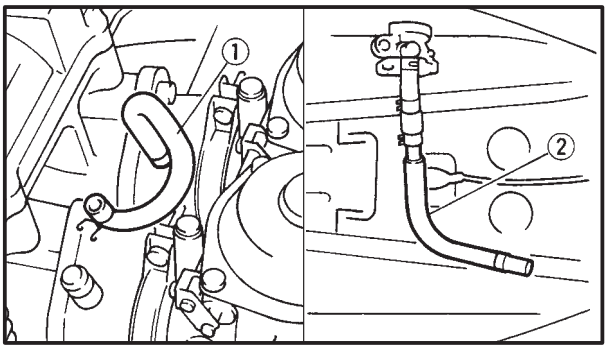

2. Check:
   - vacuum hose ①
   - fuel hose ②

   Cracks/damage → Replace.
   Loose connection → Connect properly.

3. Install:
   - fuel tank
   - seat

   Refer to “SEAT, SIDE COVER AND FUEL TANK”.

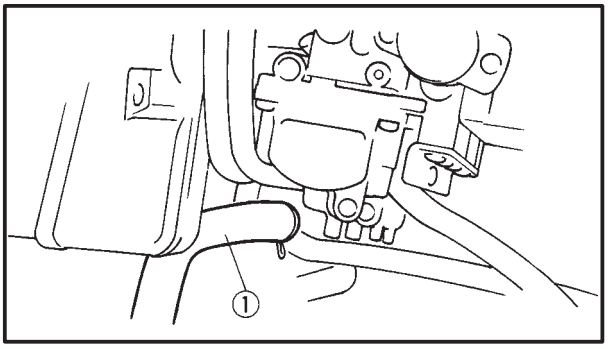

EAS00098

CHECKING THE CRANKCASE BREATHER HOSE

EAS00100

1. Check:
   - crankcase breather hose ①
     Cracks/damage → Replace.
     Loose connection → Connect properly.

CAUTION:

Make sure that the crankcase breather hose is routed correctly.

EAS00099

CHECKING THE EXHAUST SYSTEM

The following procedure applies to all of the exhaust pipes, mufflers and gaskets.

1. Check:
   - exhaust pipe ①
   - muffler ②
     Cracks/damage → Replace.
   - gasket ③, ④, ⑤
     Exhaust gas leaks → Replace.
2. Check:
   - tightening torque

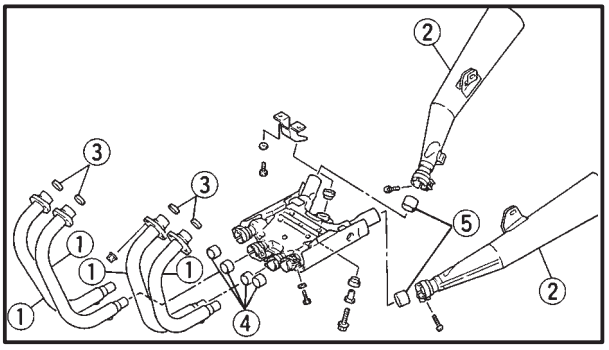

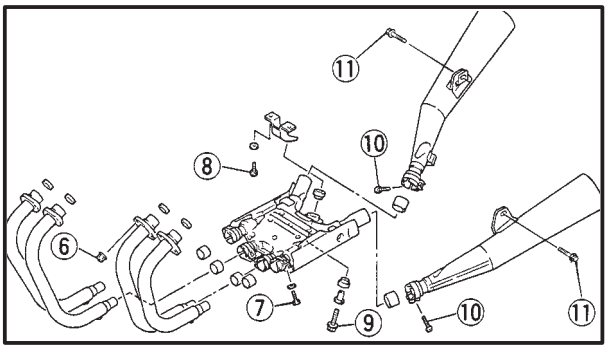

Exhaust pipe nut ⑥
25 Nm (2.5 m•kg)
Exhaust pipe and exhaust chamber screw ⑦
20 Nm (2.0 m•kg)
Muffler bracket bolt ⑧
20 Nm (2.0 m•kg)
Exhaust chamber bolt ⑨
25 Nm (2.5 m•kg)
Exhaust chamber and muffler bolt ⑩
20 Nm (2.0 m•kg)
Muffler and stay bolt ⑪
20 Nm (2.0 m•kg)

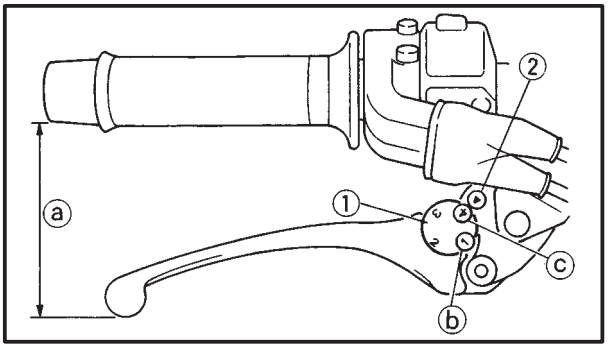

EAS00107

CHASSIS

ADJUSTING THE FRONT BRAKE

1. Adjust:
   - brake lever position
     (distance ⓐ from the throttle grip to the brake lever)

▼▼▼▼▼▼▼▼▼▼▼▼▼▼▼▼▼▼▼▼▼▼▼▼▼▼▼▼▼▼▼▼

a. While pushing the brake lever forward, turn the adjusting dial ① until the brake lever is in the desired position.

NOTE:

Be sure to align the setting on the adjusting dial with the arrow mark ② on the brake lever holder.

Position #1 ⓑ	**Distance ⓐ is the largest.**
Position #4 ⓒ	**Distance ⓐ is the smallest.**

⚠ WARNING

After adjusting the brake lever position, make sure that the pin on the brake lever holder is firmly inserted in the hole in the adjusting dial.

▲▲▲▲▲▲▲▲▲▲▲▲▲▲▲▲▲▲▲▲▲▲▲▲▲▲▲▲▲▲▲▲

EAS00110

ADJUSTING THE REAR BRAKE

1. Check:
   - brake pedal position
     (distance ⓐ from the top of the rider footrest to the top of the brake pedal)
     Out of specification → Adjust.

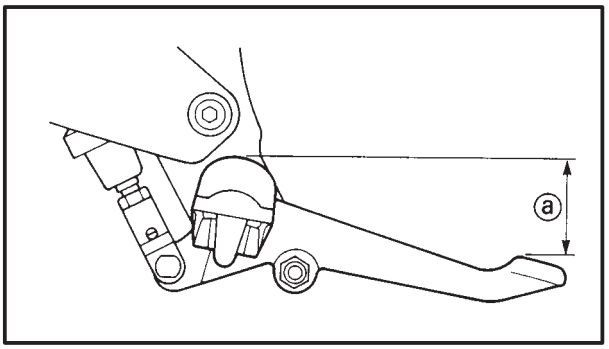

	Brake pedal position (below the top of the rider footrest) **45 mm**

2. Adjust:
   - brake pedal position

▼▼▼▼▼▼▼▼▼▼▼▼▼▼▼▼▼▼▼▼▼▼▼▼▼▼▼▼▼▼▼▼

a. Loosen the locknut ①.
b. Turn the adjusting bolt ② in direction ⓐ or ⓑ until the specified brake pedal position is obtained.

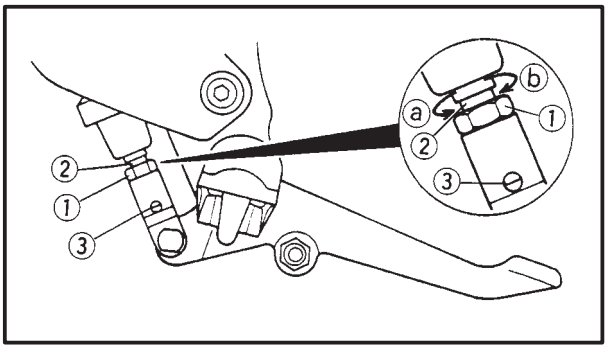

Direction ⓐ **Brake pedal is lowered.**
Direction ⓑ **Brake pedal is raised.**

⚠ WARNING

After adjusting the brake pedal position, check that the end of the adjusting bolt ② is visible through the hole ③.

EAS00110

c. Tighten the locknut ① to specification.

	Locknut **18 Nm (1.8 m•kg)**

WARNING

A soft or spongy feeling in the brake pedal can indicate the presence of air in the brake system. Before the vehicle is operated, the air must be removed by bleeding the brake system. Air in the brake system will considerably reduce braking performance and could result in loss of control and possibly an accident. Therefore, inspect and, if necessary, bleed the brake system.

CAUTION:

After adjusting the brake pedal position, make sure that there is no brake drag.

▲▲▲▲▲▲▲▲▲▲▲▲▲▲▲▲▲▲▲▲▲▲▲▲▲▲▲▲▲▲▲▲

3. Adjust:
   - rear brake light switch
     Refer to “ADJUSTING THE REAR BRAKE LIGHT SWITCH”.

EAS00115

CHECKING THE BRAKE FLUID LEVEL

1. Stand the motorcycle on a level surface.

NOTE:

- Place the motorcycle on a suitable stand.
- Make sure that the motorcycle is upright.

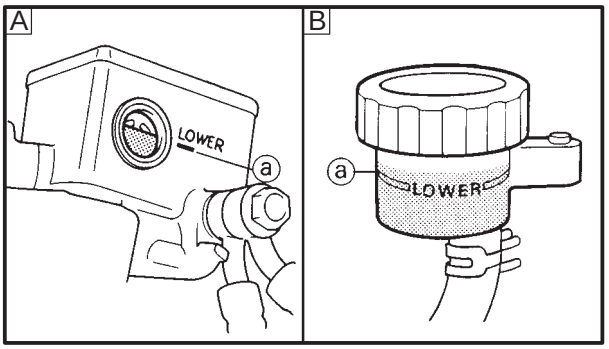

2. Check:
   - brake fluid level
     Below the minimum level mark ⓐ → Add the recommended brake fluid to the proper level.

	Recommended brake fluid **DOT 4**

A Front brake
B Rear brake

WARNING

- **Use only the designated brake fluid. Other brake fluids may cause the rubber seals to deteriorate, causing leakage and poor brake performance.**
- **Refill with the same type of brake fluid that is already in the system. Mixing brake fluids may result in a harmful chemical reaction, leading to poor brake performance.**

- **When refilling, be careful that water does not enter the reservoir. Water will significantly lower the boiling point of the brake fluid and could cause vapor lock.**

CAUTION:

Brake fluid may damage painted surfaces and plastic parts. Therefore, always clean up any spilt brake fluid immediately.

NOTE:

In order to ensure a correct reading of the brake fluid level, make sure that the top of the reservoir is horizontal.

EAS00118

CHECKING THE BRAKE PADS

The following procedure applies to all of the brake pads.

1. Operate the brake.
2. Check:
   - front brake pad
   - rear brake pad
     Brake pad almost worn to the wear indicator line ① → Replace the brake pads as a set. Refer to “REPLACING THE FRONT BRAKE PADS” and “REPLACING THE REAR BRAKE PADS” in chapter 6.

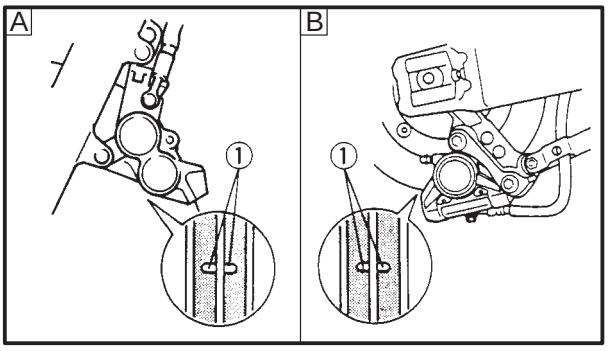

A Front brake
B Rear brake

EAS00128

ADJUSTING THE REAR BRAKE LIGHT SWITCH

NOTE:

The rear brake light switch is operated by movement of the brake pedal.
The rear brake light switch is properly adjusted when the brake light comes on just before the braking effect starts.

1. Check:
   - rear brake light operation timing
     Incorrect → Adjust.
2. Adjust:
   - rear brake light operation timing

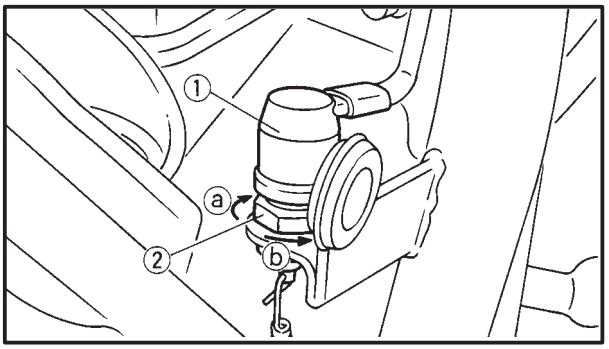

▼▼▼▼▼▼▼▼▼▼▼▼▼▼▼▼▼▼▼▼▼▼▼▼▼▼▼▼▼▼▼▼

a. Hold the main body ① of the rear brake light switch so that it does not rotate and turn the adjusting nut ② in direction ⓐ or ⓑ until the rear brake light comes on at the proper time.

Direction ⓐ	**Brake light comes on sooner.**
Direction ⓑ	**Brake light comes on later.**

▲▲▲▲▲▲▲▲▲▲▲▲▲▲▲▲▲▲▲▲▲▲▲▲▲▲▲▲▲▲▲▲

EAS00134

BLEEDING THE HYDRAULIC BRAKE SYSTEM

WARNING

Bleed the hydraulic brake system whenever:
- **the system was disassembled,**
- **a brake hose was loosened or removed,**
- **the brake fluid level is very low,**
- **brake operation is faulty.**

NOTE:
- Be careful not to spill any brake fluid or allow the brake master cylinder reservoir or brake fluid reservoir to overflow.
- When bleeding the hydraulic brake system, make sure that there is always enough brake fluid before applying the brake. Ignoring this precaution could allow air to enter the hydraulic brake system, considerably lengthening the bleeding procedure.
- If bleeding is difficult, it may be necessary to let the brake fluid settle for a few hours.
  Repeat the bleeding procedure when the tiny bubbles in the hose have disappeared.

1. Bleed:
   - hydraulic brake system

▼▼▼▼▼▼▼▼▼▼▼▼▼▼▼▼▼▼▼▼▼▼▼▼▼▼▼▼▼▼▼▼▼▼

a. Add the recommended brake fluid to the proper level.
b. Install the diaphragm (brake master cylinder reservoir or brake fluid reservoir).
c. Connect a clear plastic hose ① tightly to the bleed screw ②.

A Front
B Rear

d. Place the other end of the hose into a container.
e. Slowly apply the brake several times.
f. Fully squeeze the brake lever or fully depress the brake pedal and hold it in position.
g. Loosen the bleed screw.
   This will release the tension and cause the brake lever to contact the throttle grip or the brake pedal to fully extend.
h. Tighten the bleed screw and then release the brake lever or brake pedal.
i. Repeat steps (e) to (h) until all of the air bubbles have disappeared from the brake fluid in the plastic hose.
j. Tighten the bleed screw to specification.

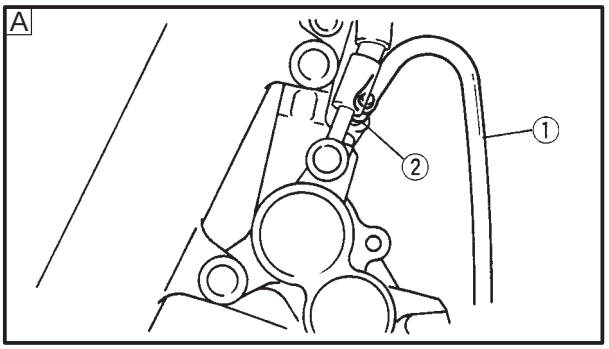

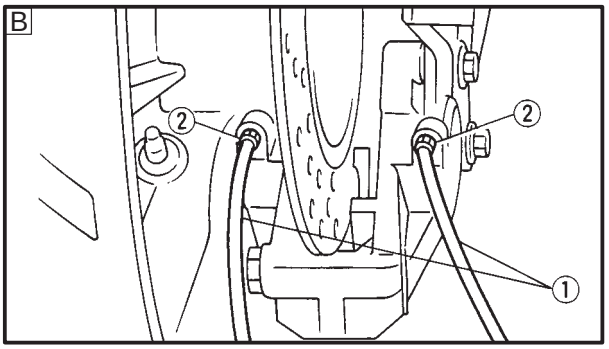

	Bleed screw **6 Nm (0.6 m•kg)**

k. Fill the reservoir to the proper level.
   Refer to “CHECKING THE BRAKE FLUID LEVEL”.

WARNING

After bleeding the hydraulic brake system, check the brake operation.

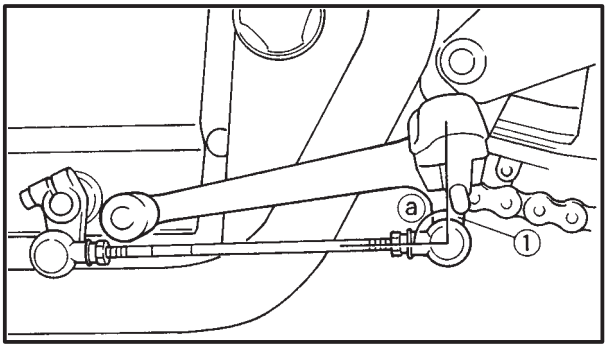

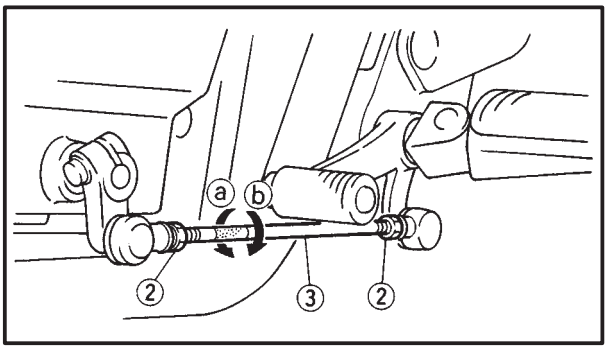

EAS00136

ADJUSTING THE SHIFT PEDAL

1. Check:
   - shift pedal position
     The end ① of the shift pedal is above the shift rod. (The angle ⓐ should be approximately 90°.)
     Incorrect → Adjust.
2. Adjust:
   - shift pedal position

a. Loosen both locknuts ②.
b. Turn the shift rod ③ in direction ⓐ or ⓑ to obtain the correct shift pedal position.

Direction ⓐ	**Shift pedal is raised.**
Direction ⓑ	**Shift pedal is lowered.**

- Tighten both locknuts.

EAS00140

ADJUSTING THE DRIVE CHAIN SLACK

NOTE:

The drive chain slack must be checked at the tightest point on the chain.

CAUTION:

A drive chain that is too tight will overload the engine and other vital parts, and one that is too loose can skip and damage the swingarm or cause an accident. Therefore, keep the drive chain slack within the specified limits.

ADJUSTING THE DRIVE CHAIN SLACK

CHK ADJ

1. Stand the motorcycle on a level surface.

WARNING

Securely support the motorcycle so that there is no danger of it falling over.

NOTE:

Place the motorcycle on a suitable stand so that the rear wheel is elevated.

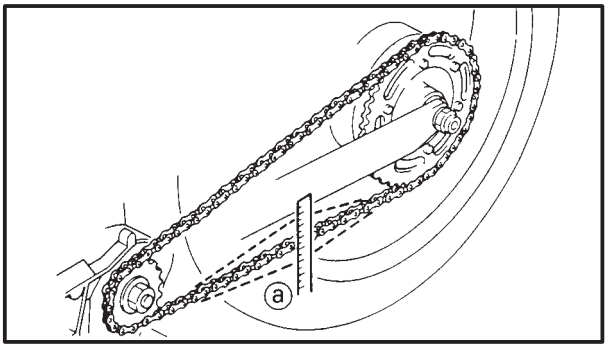

2. Rotate the rear wheel several times and check the drive chain to locate its tightest point.
3. Check:
   - drive chain slack ⓐ
     Out of specification → Adjust.

	Drive chain slack **20 ~ 30 mm**

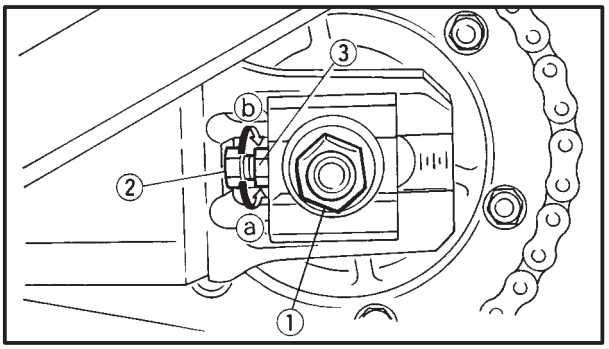

4. Adjust:
   - drive chain slack

a. Loosen the tensionbar bolt .
b. Loosen the wheel axle nut ①.
c. Loosen both locknuts ②.
d. Turn both adjusting bolt ③ in direction ⓐ or ⓑ until the specified drive chain slack is obtained.

Direction ⓐ	**Drive chain is tightened.**
Direction ⓑ	**Drive chain is loosened.**

NOTE:

To maintain the proper wheel alignment, adjust both sides evenly.

f. Tighten both locknuts to specification.

	Locknut **16 Nm (1.6 m•kg)**

g. Tighten the wheel axle nut to specification.

	Wheel axle nut **150 Nm (15.0 m•kg)**

WARNING

Always use a new cotter pin.

CAUTION:

Do not loosen the wheel axle nut after tightening it to the specified torque. If the groove in the wheel axle nut is not aligned with the cotter pin hole in the wheel axle, tighten the nut further until they are aligned.

i. Tighten the tensionbar bolt to specification.

Tensionbar bolt
23 Nm (2.3 m•kg)

EAS00142

LUBRICATING THE DRIVE CHAIN

The drive chain consists of many interacting parts. If the drive chain is not maintained properly, it will wear out rapidly.
Therefore, the drive chain should be serviced, especially when the motorcycle is used in dusty areas. This motorcycle has a drive chain with small rubber O-rings ① between each side plate. Steam cleaning, high-pressure washing, certain solvents, and the use of a coarse brush can damage these O-rings. therefore, use only kerosine to clean the drive chain. Wipe the drive chain dry and thoroughly lubricate it with engine oil or chain lubricant that is suitable for O-ring chains. Do not use any other lubricants on the drive chain since they may contain solvents that could damage the O-rings.

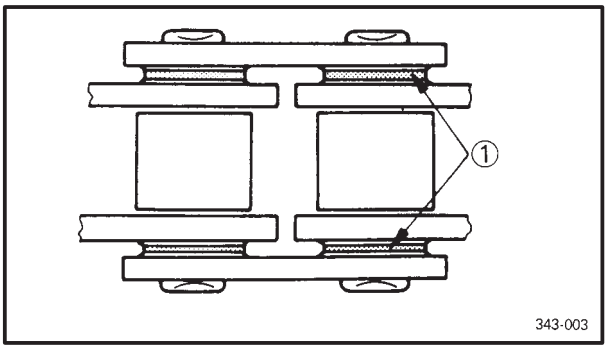

Recommended lubricant
Engine oil or chain lubricant suitable for O-ring chains

EAS00146

CHECKING AND ADJUSTING THE STEERING HEAD

1. Stand the motorcycle on a level surface.

WARNING

Securely support the motorcycle so that there is no danger of it falling over.

NOTE:

Place the motorcycle on a suitable stand so that the front wheel is elevated.

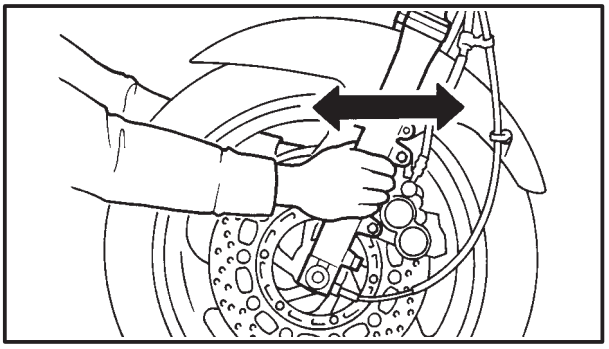

2. Check:
   - steering head
     Grasp the bottom of the front fork legs and gently rock the front fork.
     Looseness or binding → Adjust the steering head.
3. Remove:
   - seat
   - fuel tank
     Refer to “SEAT, SIDE COVER AND FUEL TANK”.

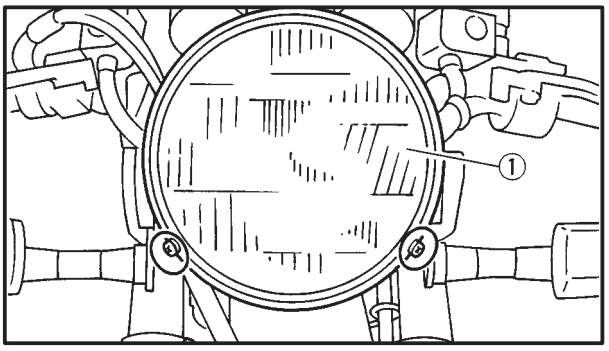

4. Remove:
   - headlight unit ①

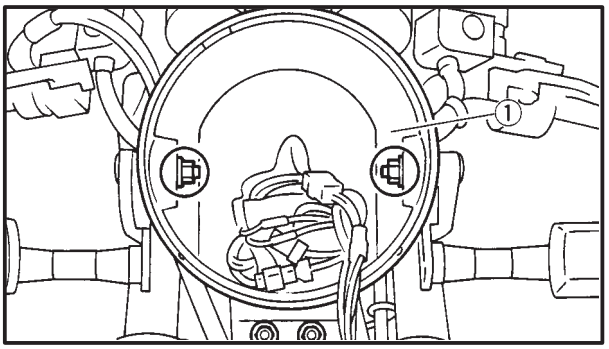

5. Remove:
   - headlight body ①

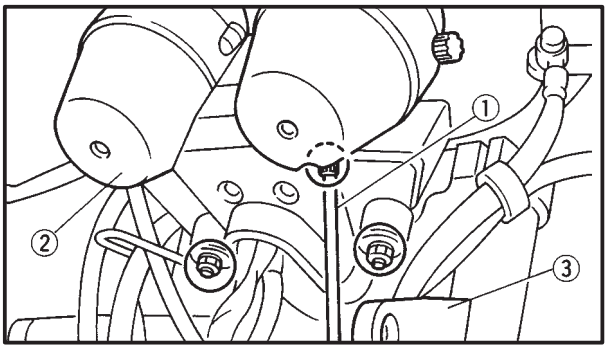

6. Disconnect:
   - speed meter cable ①
7. Remove:
   - meter assembly ②
   - headlight stay ③

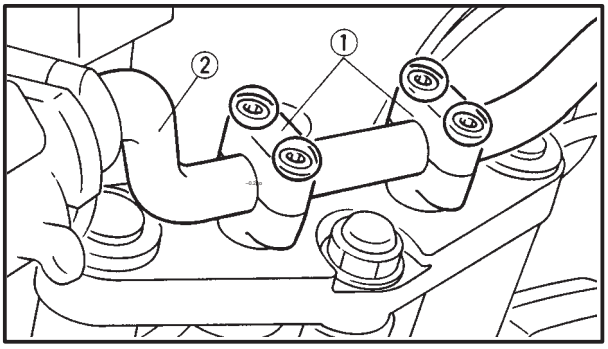

8. Remove:
   - upper handleber holder ①
   - handleber ②

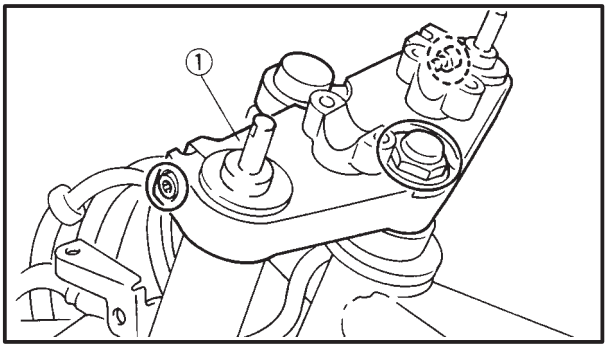

9. Remove:
   - handle crown ①

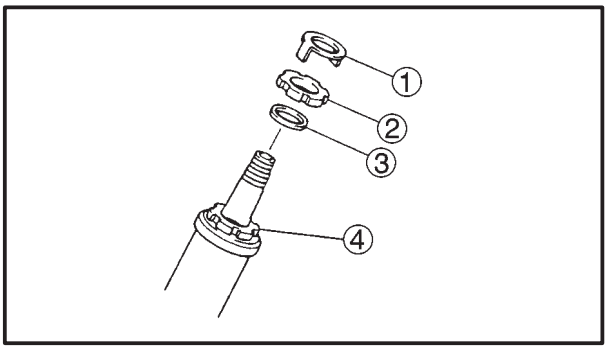

10. Adjust:
    - steering head

a. Remove the lock washer ①, the upper ring nut ②, and the rubber washer ③.
b. Loosen the lower ring nut ④ and then tighten it to specification with a ring nut wrench ⑤.

NOTE:

Set the torque wrench at a right angle to the ring nut wrench.

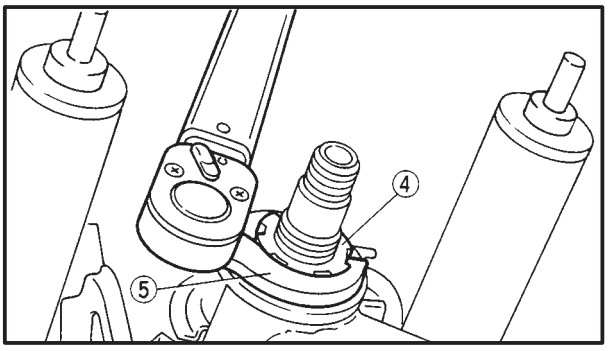

	Ring nut wrench **90890-01403**

	Lower ring nut (initial tightening torque) **52 Nm (5.2 m•kg)**

c. Loosen the lower ring nut ④ completely, then tighten it to specification.

⚠ WARNING

Do not overtighten the lower ring nut.

	Lower ring nut (final tightening torque) **18 Nm (1.8 m•kg)**

d. Check the steering head for looseness or binding by turning the front fork all the way in both directions. If any binding is felt, remove the lower bracket and inspect the upper and lower bearings.
   Refer to “STEERING HEAD AND HANDLEBAR” in chapter 7.

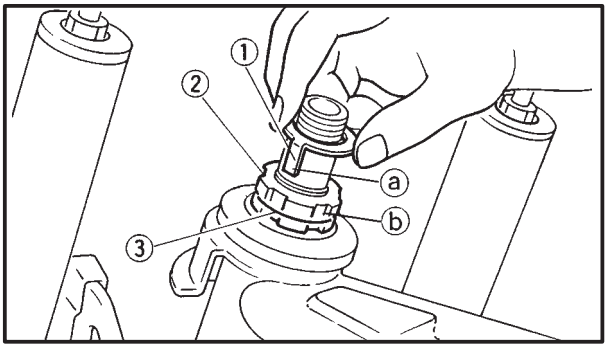

e. Install the rubber washer ③.
f. Install the upper ring nut ②.
g. Finger tighten the upper ring nut ②, then align the slots of both ring nuts. If necessary, hold the lower ring nut and tighten the upper ring nut until their slots are aligned.
h. Install the lock washer ①.

NOTE:

Make sure that the lock washer tabs ⓐ sit correctly in the ring nut slots ⓑ.

11. Install:
- handle crown

	Steering stem nut **110 Nm (11.0 m•kg)** **Upper bracket pinch bolt** **30 Nm (3.0 m•kg)**

12. Install:
- handlebar

13. Install:
- upper handlebar holder

	Handlebar holder bolt **23 Nm (2.3 m•kg)**

EAS00149

CHECKING THE FRONT FORK

1. Stand the motorcycle on a level surface.

WARNING

Securely support the motorcycle so that there is no danger of it falling over.

2. Check:
- inner tube
  Damage/scratches → Replace.
- oil seal
  Oil leakage → Replace.

3. Hold the motorcycle upright and apply the front brake.
4. Check:
- operation
  Push down hard on the handlebar several times and check if the front fork rebounds smoothly.
  Unsmooth operation → Repair.
  Refer to “FRONT FORK” in chapter 6.

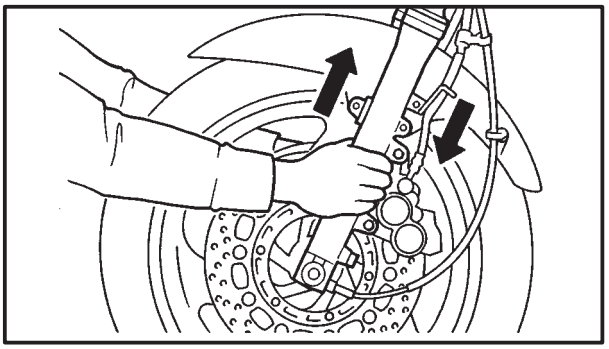

ADJUSTING THE FRONT FORK LEGS

The following procedure applies to both of the front fork legs.

WARNING

- **Always adjust both front fork legs evenly. Uneven adjustment can result in poor handling and loss of stability.**
- **Securely support the motorcycle so that there is no danger of it falling over.**

Spring preload

CAUTION:

- **Grooves are provided to indicate the adjustment position.**
- **Never go beyond the maximum or minimum adjustment positions.**

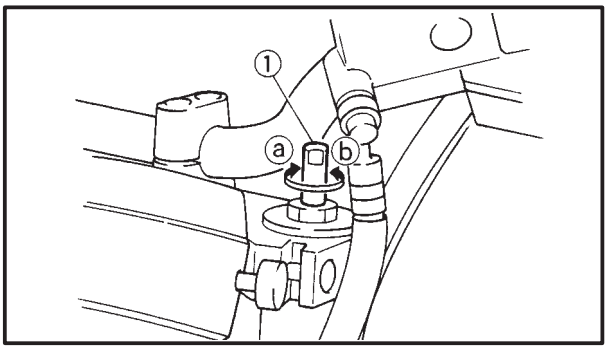

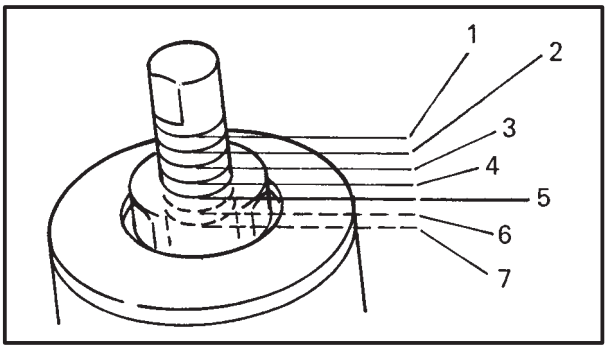

1. Adjust:
   - spring preload

a. Turn the adjusting bolt ① in direction ⓐ or ⓑ.

Direction ⓐ	**Spring preload is increased (suspension is harder).**
Direction ⓑ	**Spring preload is decreased (suspension is softer).**

EAS00155

Adjusting positions
Standard: 5
Minimum: 7 (Soft)
Maximum: 1 (Hard)

EAS00161

ADJUSTING THE REAR SHOCK ABSORBER ASSEMBLIES

The following procedure applies to both of the rear shock absorber assemblies.

WARNING

- **Securely support the motorcycle so that there is no danger of it falling over.**
- **Always adjust both rear shock absorber assemblies evenly. Uneven adjustment can result in poor handling and loss of stability.**

Spring preload

CAUTION:

Never go beyond the maximum or minimum adjustment positions.

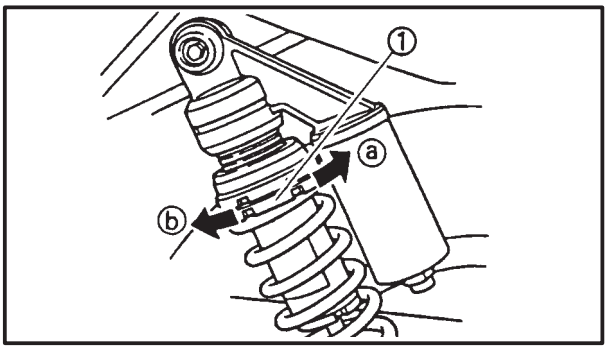

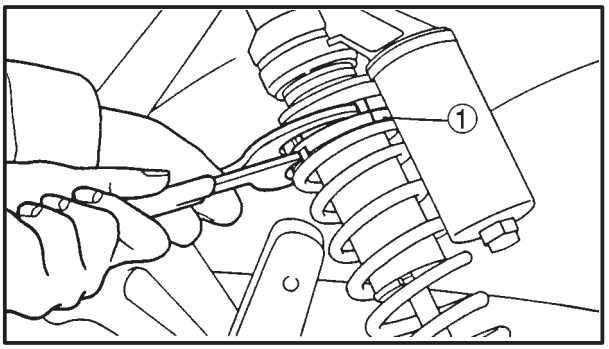

1. Adjust:
   - spring preload

NOTE:

Adjust the spring preload with the special wrench and extension bar in cluded in the owner's tool kit.

a. Turn the spring seat ① in direction ⓐ or ⓑ.

Direction ⓐ	**Spring preload is increased (suspension is harder).**
Direction ⓑ	**Spring preload is decreased (suspension is softer).**

Adjusting positions
Standard: 1
Minimum: 1
Maximum: 3

EAS00162

CHECKING THE TIRES

The following procedure applies to both of the tires.

1. Measure:
   - tire pressure
     Out of specification → Regulate.

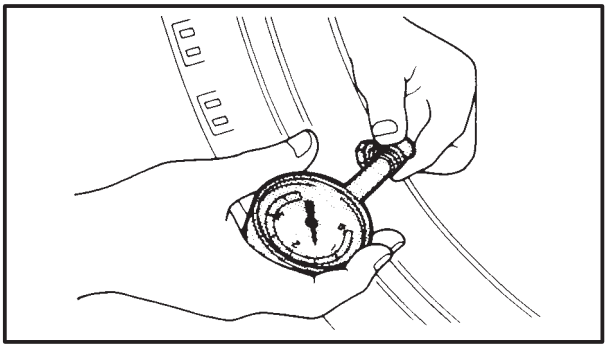

WARNING

- **The tire pressure should only be checked and regulated when the tire temperature equals the ambient air temperature.**
- **The tire pressure and the suspension must be adjusted according to the total weight (including cargo, rider, passenger and accessories) and the anticipated riding speed.**
- **Operation of an overloaded motorcycle could cause tire damage, an accident or an injury.**

NEVER OVERLOAD THE MOTORCYCLE.

Basic weight (with oil and a full fuel tank)	253 kg	
Maximum load	207 kg	
Cold tire pressure	Front tire	Rear tire
Up to 90 kg load*	250 kPa (2.5 kg/cm^2, 2.5 bar)	250 kPa (2.5 kg/cm^2, 2.5 bar)
90 kg ~ Maximum load*	250 kPa (2.5 kg/cm^2, 2.5 bar)	290 kPa (2.9 kg/cm^2, 2.9 bar)
High speed riding	250 kPa (2.5 kg/cm^2, 2.5 bar)	290 kPa (2.9 kg/cm^2, 2.9 bar)

* Load is the total weight of cargo, rider, passenger and accessories

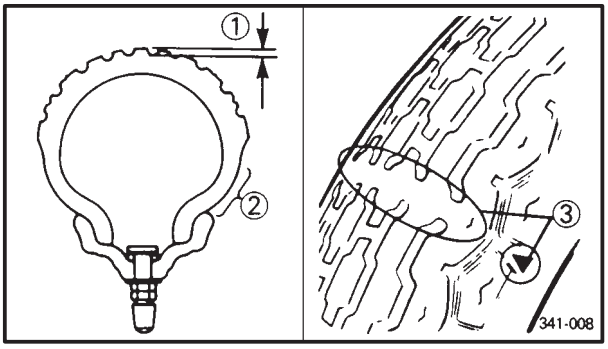

WARNING

It is dangerous to ride with a worn-out tire. When the tire tread reaches the wear limit, replace the tire immediately.

2. Check:
   - tire surfaces
     Damage/wear → Replace the tire.

Minimum tire tread depth
1.6 mm

① Tire tread depth
② Side wall
③ Wear indicator

WARNING

- **Do not use a tubeless tire on a wheel designed only for tube tires to avoid tire failure and personal injury from sudden deflation.**
- **When using a tube tire, be sure to install the correct tube.**
- **Always replace a new tube tire and a new tube as a set.**
- **To avoid pinching the tube, make sure that the wheel rim band and tube are centered in the wheel groove.**
- **Patching a punctured tube is not recommended. If it is absolutely necessary to do so, use great care and replace the tube as soon as possible with a good quality replacement.**

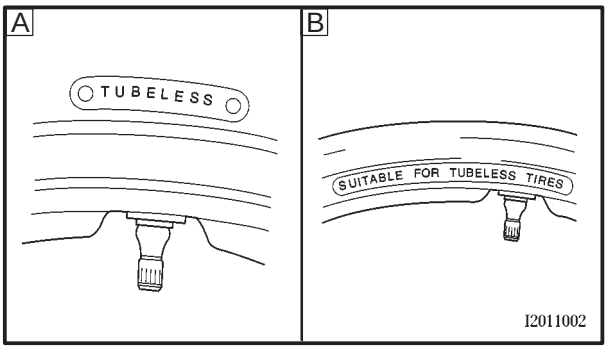

A Tire B Wheel

Tube wheel	**Tube tire only**
Tubebeless wheel	**Tube or tubeless tire**

After extensive tests, the tires listed below have been approved by Yamaha Motor Co., Ltd. for this model. The front and rear tires should always be by the same manufacturer and of the same design. No guarantee concerning handling characteristics can be given if a tire combination other than one approved by Yamaha is used on this motorcycle.

Front tire

Manufacturer	Size	Type
MICHELIN	120/70ZR17	MACADAM 90X
DUNLOP	120/70ZR17	D207F
BRIDGESTONE	120/70ZR17	BT57F

Rear tire

Manufacturer	Size	Type
MICHELIN	180/55ZR17	MACADAM 90X
DUNLOP	180/55ZR17	D207
BRIDGESTONE	180/55ZR17	BT57R

WARNING

New tires have a relatively low grip on the road surface until they have been slightly worn.
Therefore, approximately 100 km should be traveled at normal speed before any high-speed riding is done.

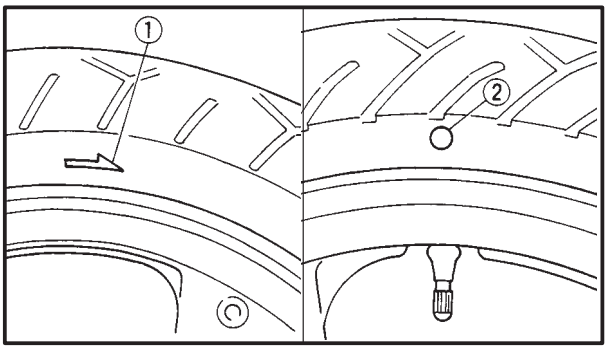

NOTE:

For tires with a direction of rotation mark ①:
- Install the tire with the mark pointing in the direction of wheel rotation.
- Align the mark ② with the valve installation point.

EAS00168

CHECKING THE WHEELS

The following procedure applies to both of the wheels.

1. Check:
   - wheel
     Damage/out-of-round → Replace.

WARNING

Never attempt to make any repairs to the wheel.

NOTE:

After a tire or wheel has been changed or replaced, always balance the wheel.

EAS00170

CHECKING AND LUBRICATING THE CABLES

The following procedure applies to all of the cable sheaths and cables.

WARNING

Damaged cable sheaths may cause the cable to corrode and interfere with its movement. Replace damaged cable sheaths and cables as soon as possible.

1. Check:
   - cable sheath
     Damage → Replace.
2. Check:
   - cable operation
     Unsmooth operation → Lubricate.

Recommended lubricant
Engine oil or a suitable cable lubricant

NOTE:

Hold the cable end upright and pour a few drops of lubricant into the cable sheath or use a suitable lubing device.

EAS00171

LUBRICATING THE LEVERS AND PEDALS

Lubricate the pivoting point and metal-to-metal moving parts of the levers and pedals.

Recommended lubricant
Engine oil

EAS00172

LUBRICATING THE SIDESTAND

Lubricate the pivoting point and metal-to-metal moving parts of the sidestand.

Recommended lubricant
Engine oil

EAS00173

LUBRICATING THE CENTERSTAND

Lubricate the pivoting point and metal-to-metal moving parts of the centerstand.

Recommended lubricant
Engine oil

EAS00174

LUBRICATING THE REAR SUSPENSION

Lubricate the pivoting point and metal-to-metal moving parts of the rear suspension.

Recommended lubricant
Molydenum disulfide grease

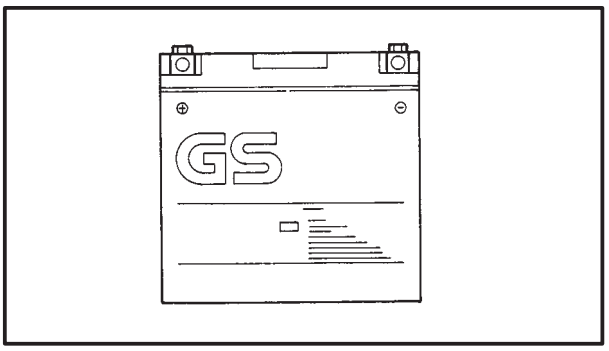

EAS00178

ELECTRICAL SYSTEM

CHECKING AND CHARGING THE BATTERY

WARNING

Batteries generate explosive hydrogen gas and contain electrolyte which is made of poisonous and highly caustic sulfuric acid. Therefore, always follow these preventive measures:

- **Wear protective eye gear when handling or working near batteries.**
- **Charge batteries in a well-ventilated area.**
- **Keep batteries away from fire, sparks or open flames (e.g., welding equipment, lighted cigarettes).**
- **DO NOT SMOKE when charging or handling batteries.**
- **KEEP BATTERIES AND ELECTROLYTE OUT OF REACH OF CHILDREN.**
- **Avoid bodily contact with electrolyte as it can cause severe burns or permanent eye injury.**

First aid in case of bodily contact:

External

- **SKIN – Wash with water.**
- **EYES – Flush with water for 15 minutes and get immediate medical attention.**

Internal

Drink large quantities of water or milk followed with milk of magnesia, beaten egg or vegetable oil. Get immediate medical attention.

CAUTION:

- **This is a sealed battery. Never remove the sealing caps because the balance between cells will not be maintained and battery performance will deteriorate.**
- **Charging time, charging amperage and charging voltage for a MF battery are different from those of conventional batteries. The MF battery should be charged as explained in the charging method illustrations. If the battery is overcharged, the electrolyte level will drop considerably. Therefore, take special care when charging the battery.**

NOTE:

Since MF batteries are sealed, it is not possible to check the charge state of the battery by measuring the specific gravity of the electrolyte. Therefore, the charge of the battery has to be checked by measuring the voltage at the battery terminals.

1. Remove:
   - seat
2. Disconnect:
   - battery leads
     (from the battery terminals)

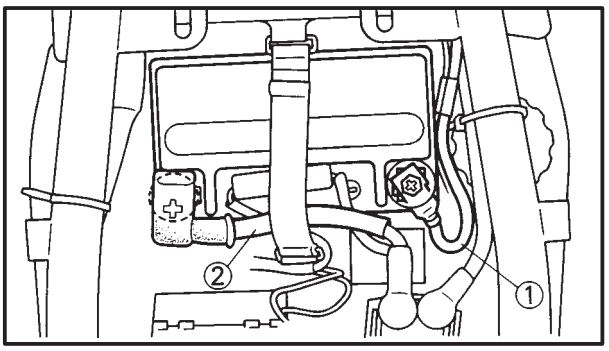

CAUTION:

First, disconnect the negative lead ①, then the positive lead ②.

3. Remove:
   - battery
4. Check:
   - battery charge

▼▼▼▼▼▼▼▼▼▼▼▼▼▼▼▼▼▼▼▼▼▼▼▼▼▼▼▼▼▼▼▼

a. Connect a pocket tester to the battery terminals.

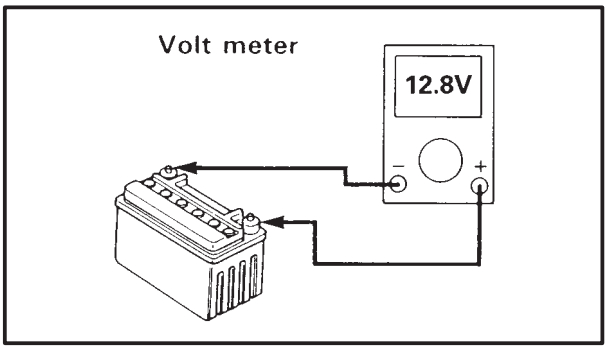

Tester positive lead → battery positive terminal
Tester negative lead → battery negative terminal

NOTE:

- The charge state of a MF battery can be checked by measuring its open-circuit voltage (i.e., the voltage when the positive terminal is disconnected).
- No charging is necessary when the open-circuit voltage equals or exceeds 12.8 V.

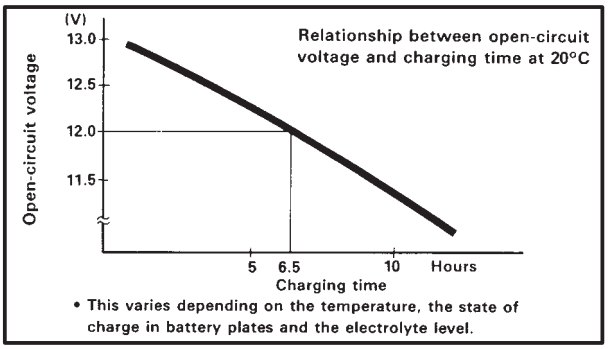

b. Check the charge of the battery, as shown in the charts and the following example.

Example

c. Open-circuit voltage = 12.0 V
d. Charging time = 6.5 hours
e. Charge of the battery = 20 ~ 30 %

▲▲▲▲▲▲▲▲▲▲▲▲▲▲▲▲▲▲▲▲▲▲▲▲▲▲▲▲▲▲▲▲

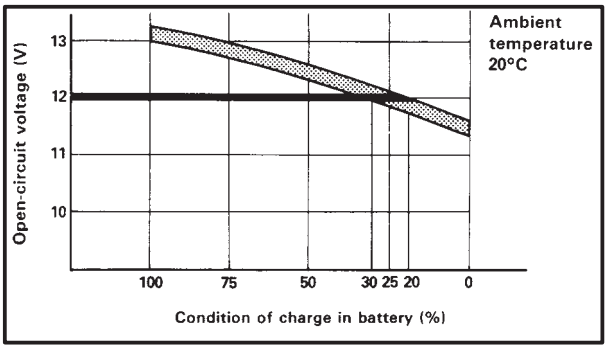

5. Charge:
   - battery
     (refer to the appropriate charging method illustration)

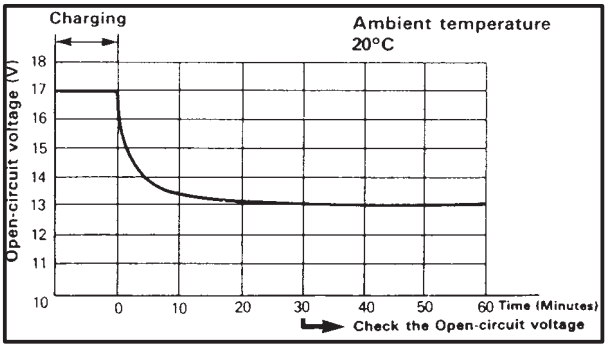

WARNING

Do not quick charge a battery.

CAUTION:

- **Make sure that the battery vent is free of obstructions.**
- **Never remove the MF battery sealing caps.**
- **Do not use a high-rate battery charger. They force a high-amperage current into the battery quickly and can cause battery overheating and battery plate damage.**
- **If it is impossible to regulate the charging current on the battery charger, be careful not to overcharge the battery.**
- **When charging a battery, be sure to remove it from the motorcycle. (If charging has to be done with the battery mounted on the motorcycle, disconnect the negative lead from the battery terminal.)**
- **To reduce the chance of sparks, do not plug in the battery charger until the battery charger leads are connected to the battery.**
- **Before removing the battery charger lead clips from the battery terminals, be sure to turn off the battery charger.**
- **Make sure that the battery charger lead clips are in full contact with the battery terminal and that they are not shorted. A corroded battery charger lead clip may generate heat in the contact area and a weak clip spring may cause sparks.**
- **If the battery becomes hot to the touch at any time during the charging process, disconnect the battery charger and let the battery cool before reconnecting it. Hot batteries can explode!**
- **As shown in the following illustration, the open-circuit voltage of a MF battery stabilizes about 30 minutes after charging has been completed. Therefore, wait 30 minutes after charging is completed before measuring the open-circuit voltage.**

Charging method using a variable-voltage charger

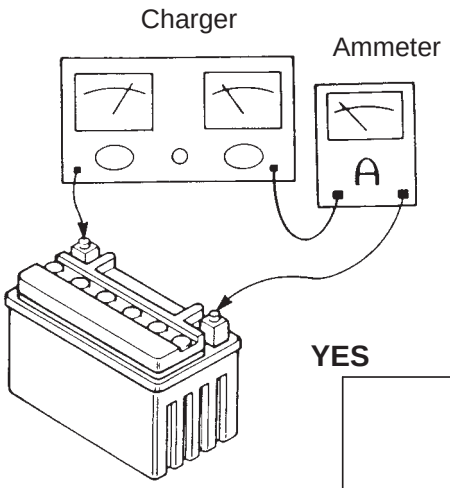

Measure the open-circuit voltage prior to charging.

NOTE:
Leave the battery unused for more than 30 minutes before measuring its open-circuit voltage.

Connect a charger and ammeter to the battery and start charging.

NOTE:
Set the charging voltage to 16 ~ 17 V. (If the charging voltage is lower charging will be insufficient, if it is higher, the battery will be over-charged.)

Is the amperage higher than the standard charging amperage written on the battery?

YES → Adjust the voltage to obtain the standard charging amperage.

NO → Adjust the charging voltage to 20 ~ 25 V.

Monitor the amperage for 3 ~ 5 minutes. Is the standard charging amperage exceeded?

YES → Adjust the voltage to obtain the standard charging amperage.

NO → If the amperage does not exceed the standard charging amperage after 5 minutes, replace the battery.

Set the timer to the charging time determined by the open-circuit voltage.
Refer to “CHECKING AND CHARGING THE BATTERY”.

If the required charging time exceeds 5 hours, it is advisable to check the charging amperage after 5 hours. If there is any change in the amperage, readjust the voltage to obtain the standard charging amperage.

Leave the battery unused for more than 30 minutes before measuring its open-circuit voltage.
12.8 V → Charging is complete.
12.0 ~ 12.7 V → Recharging is required.
Under 12.0 V → Replace the battery.

Charging method using a constant-voltage charger

Measure the open-circuit voltage prior to charging.

NOTE:
Leave the battery unused for more than 30 minutes before measuring its open-circuit voltage.

↓

Connect a charger and ammeter to the battery and start charging.

↓

Is the amperage higher than the standard charging amperage written on the battery?

YES →

Charge the battery until the charging voltage reaches 15 V.

NOTE:
Set the charging time to a maximum of 20 hours.

↓

Leave the battery unused for more than 30 minutes before measuring its open-circuit voltage.
12.8 V → Charging is complete.
12.0 ~ 12.7 V → Recharging is required.
Under 12.0 V → Replace the battery.

NO →

This type of battery charger cannot charge an MF battery. A variable-voltage charger is recommended.

CAUTION:
Constant amperage chargers are not suitable for charging MF battries.

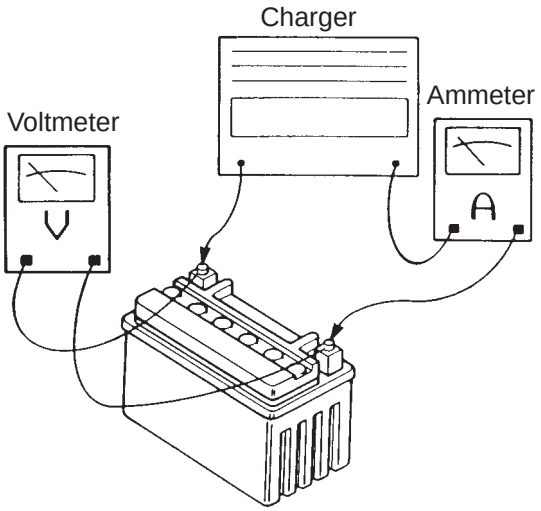

6. Check:
   - battery vent
     Obstruction → Clean.
     Damage → Replace.
7. Install:
   - battery
8. Connect:
   - battery leads
     (to the battery terminals)

CAUTION:

First, connect the positive lead ①, then the negative lead ②.

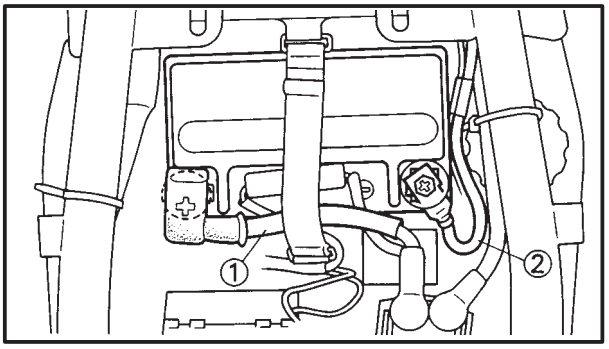

9. Check:
   - battery terminals
     Dirt → Clean with a wire brush.
     Loose connection → Connect properly.
10. Lubricate:
    - battery terminals

	Recommended lubricant **Dielectric grease**

11. Install:
    - seat

EAS00181

CHECKING THE FUSES

The following procedure applies to all of the fuses.

CAUTION:

To avoid a short circuit, always turn the main switch to "OFF" when checking or replacing a fuse.

1. Remove:
   - seat
2. Check:
   - fuse

▼▼▼▼▼▼▼▼▼▼▼▼▼▼▼▼▼▼▼▼▼▼▼▼▼▼▼▼▼▼▼▼

a. Connect the pocket tester to the fuse and check the continuity.

NOTE:

Set the pocket tester selector to "Ω x 1".

Pocket tester
90890-03112

b. If the pocket tester indicates "∞", replace the fuse.

3. Replace:
   - blown fuse

a. Turn off the ignition.
b. Install a new fuse of the correct amperage rating.
c. Turn on the switches to verify if the electrical circuit is operational.
d. If the fuse immediately blows again, check the electrical circuit.

Fuses	Amperage rating	Quantity
Main fuse	30 A	1
Headlight fuse	15 A	1
Signaling system fuse	15 A	1
Ignition fuse	7.5 A	1
Reserve	30 A	1
	15 A	1
	7.5 A	1

WARNING

Never use a fuse with an amperage rating other than that specified. Improvising or using a fuse with the wrong amperage rating may cause extensive damage to the electrical system, cause the lighting and ignition systems to malfunction and could possibly cause a fire.

4. Install:
   - seat

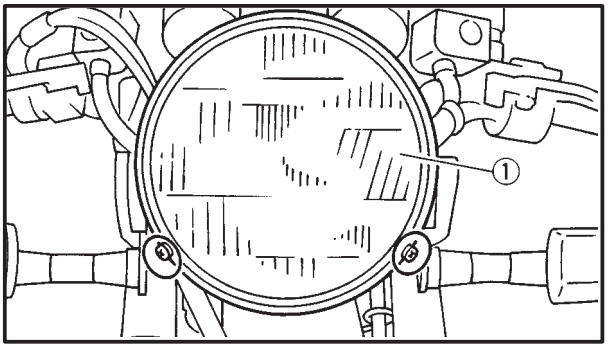

EAS00182

REPLACING THE HEADLIGHT BULB

1. Remove:
   - headlight unit ①

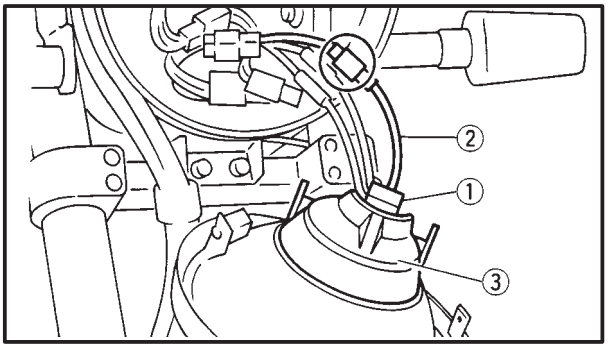

2. Disconnect:
   - headlight lead ①
   - auxiliary light lead ②
3. Remove:
   - cover ③

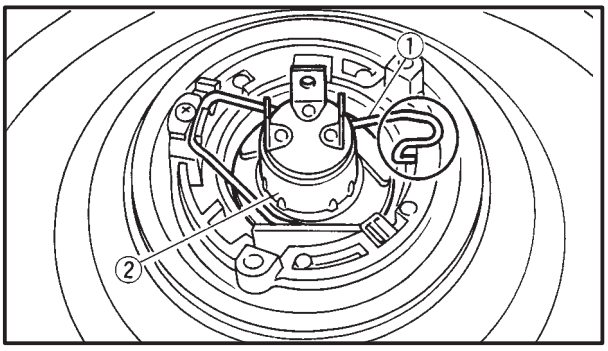

4. Remove:
   - headlight bulb holder ①
5. Remove:
   - headlight bulb ②

⚠ WARNING

Since the headlight bulb gets extremely hot, keep flammable products and your hands away from the bulb until it has cooled down.

6. Install:
   - headlight bulb (New)
     Secure the new headlight bulb with the headlight bulb holder.

CAUTION:

Avoid touching the glass part of the headlight bulb to keep it free from oil, otherwise the transparency of the glass, the life of the bulb and the luminous flux will be adversely affected. If the headlight bulb gets soiled, thoroughly clean it with a cloth moistened with alcohol or lacquer thinner.

7. Install:
   - headlight bulb holder
8. Install:
   - cover
9. Connect:
   - auxiliary light lead
   - headlight lead
10. Install:
    - headlight unit

EAS00184

ADJUSTING THE HEADLIGHT BEAM

1. Adjust:
   - headlight beam (vertically)

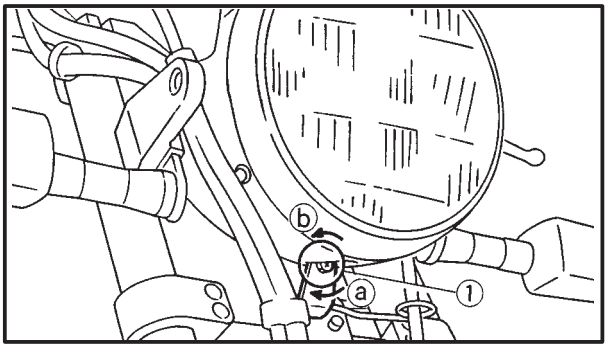

a. Turn the adjusting screw ① in direction ⓐ or ⓑ.

Direction ⓐ	**Headlight beam is raised.**
Direction ⓑ	**Headlight beam is lowered.**

2. Adjust:
   - headlight beam (horizontally)

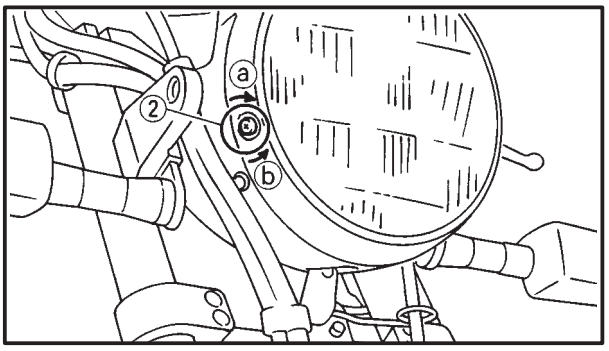

a. Turn the adjusting knob ② in direction ⓐ or ⓑ.

Direction ⓐ	**Headlight beam moves to the right.**
Direction ⓑ	**Headlight beam moves to the left.**

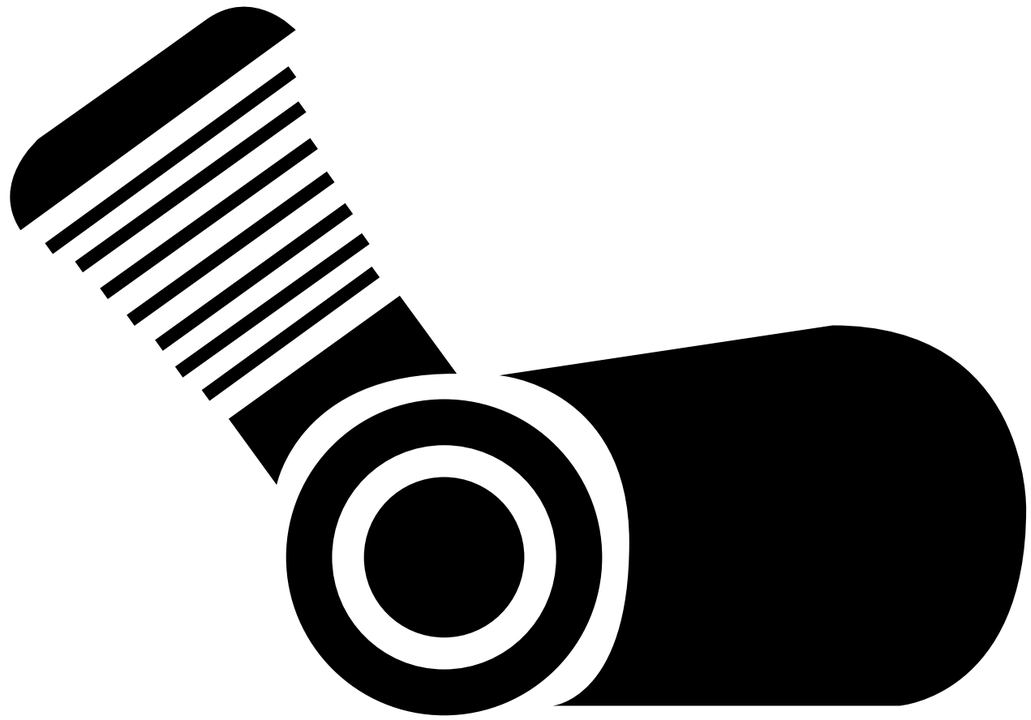

ENG 4

CHAPTER 4.
ENGINE OVERHAUL

ENGINE 4-1
LEADS, HOSES AND EXHAUST PIPES 4-1
LEADS AND DRIVE SPROCET 4-3
ENGINE 4-5
INSTALLING THE ENGINE 4-6

CAMSHAFT 4-7
CYLINDER HEAD COVER 4-7
CAMSHAFTS 4-8
REMOVING THE CAMSHAFTS 4-9
CHECKING THE CAMSHAFTS 4-10
CHECKING THE CAMSHAFT SPROCKETS AND TIMING CHAIN GUIDES 4-11
CHECKING THE TIMING CHAIN TENSIONER 4-11
INSTALLING THE CAMSHAFTS 4-12

CYLINDER HEAD 4-15
REMOVING THE CYLINDER HEAD 4-16
CHECKING THE CYLINDER HEAD 4-16
INSTALLING THE CYLINDER HEAD 4-17

VALVES AND VALVE SPRINGS 4-18
REMOVING THE VALVES 4-19
CHECKING THE VALVES AND VALVE GUIDES 4-20
CHECKING THE VALVE SEATS 4-22
CHECKING THE VALVE SPRINGS 4-23
CHECKING THE VALVE LIFTERS 4-24
INSTALLING THE VALVES 4-24

CYLINDERS AND PISTONS 4-26
REMOVING THE CYLINDERS AND PISTONS 4-27
CHECKING THE CYLINDERS AND PISTONS 4-27
CHECKING THE PISTON RINGS 4-29
INSTALLING THE PISTONS AND CYLINDERS 4-30

CLUTCH 4-32
CLUTCH COVER 4-32
CLUTCH 4-33
REMOVING THE CLUTCH 4-35
CHECKING THE FRICTION PLATES 4-35
CHECKING THE CLUTCH PLATES 4-36
CHECKING THE CLUTCH SPRING PLATE 4-36
CHECKING THE CLUTCH HOUSING 4-36
CHECKING THE CLUTCH SPRING 4-36
CHECKING THE CLUTCH SPRING PLATE 4-36
CHECKING THE CLUTCH HOUSING 4-37
CHECKING THE CLUTCH BOSS 4-37

CHECKING THE PRESSURE PLATE 4-37
CHECKING THE CLUTCH PUSH RODS 4-38
INSTALLING THE CLUTCH 4-38
CLUTCH MASTER CYLINDER 4-41
CHECKING THE CLUTCH MASTER CYLINDER 4-43
ASSEMBLING THE CLUTCH MASTER CYLINDER 4-44
INSTALLING THE CLUTCH MASTER CYLINDER 4-44
CLUTCH RELEASE CYLINDER 4-47
DISASSEMBLING THE CLUTCH RELEASE CYLINDER 4-49
CHECKING THE CLUTCH RELEASE CYLINDER 4-49
INSTALLING THE CLUTCH RELEASE CYLINDER 4-50

OIL PUMP 4-52
CHECKING THE OIL PUMP 4-54
ASSEMBLING THE OIL PUMP 4-55
INSTALLING THE OIL PUMP 4-55

SHIFT SHAFT 4-56
CHECKING THE SHIFT SHAFT 4-57
CHECKING THE STOPPER LEVER 4-57
INSTALLING THE SHIFT SHAFT 4-57

TIMING PLATE AND PICKUP COIL 4-59

OIL PAN 4-60
REMOVING THE OIL PAN 4-61
CHECKING THE RELIEF VALVE 4-61
CHECKING THE OIL DELIVERY PIPES 4-61
CHECKING THE OIL STRAINER 4-61
INSTALLING THE OIL STRAINER 4-62
INSTALLING THE OIL PAN 4-62

CRANKCASE 4-63
DISASSEMBLING THE CRANKCASE 4-65
CHECKING THE CRANKCASE 4-66
ASSEMBLING THE CRANKCASE 4-66

STARTER CLUTCH 4-68
CHECKING THE STARTER CLUTCH 4-70
CHECKING THE GENERATOR SHAFT 4-71
INSTALLING THE STARTER CLUTCH ROLLER 4-71

CRANKSHAFT 4-72
CRANKSHAFT 4-72
CONNECTING ROD 4-73
REMOVING THE CRANKSHAFT ASSEMBLY 4-74
REMOVING THE CONNECTING RODS 4-74
CHECKING THE CRANKSHAFT AND CONNECTING RODS 4-74
CHECKING THE TIMING CHAIN 4-79
CHECKING THE HY-VO CHAIN 4-79

CHECKING THE BEARINGS AND OIL SEALS 4-79
CHECKING THE CIRCLIPS AND WASHERS 4-79
INSTALLING THE CONNECTING RODS 4-79
INSTALLING THE CRANKSHAFT 4-81

TRANSMISSION 4-82
SHIFT CAM AND SHIFT FORK 4-85
CHECKING THE SHIFT FORK 4-86
CHECKING THE SHIFT DRUM ASSEMBLY 4-86
CHECKING THE TRANSMISSION 4-86
INSTALLING THE SHIFT FORKS AND SHIFT DRUM ASSEMBLY 4-87
INSTALLING THE TRANSMISSION 4-88

EAS0018

ENGINE OVERHAULE

ENGINE

LEADS, HOSES AND EXHAUST PIPES

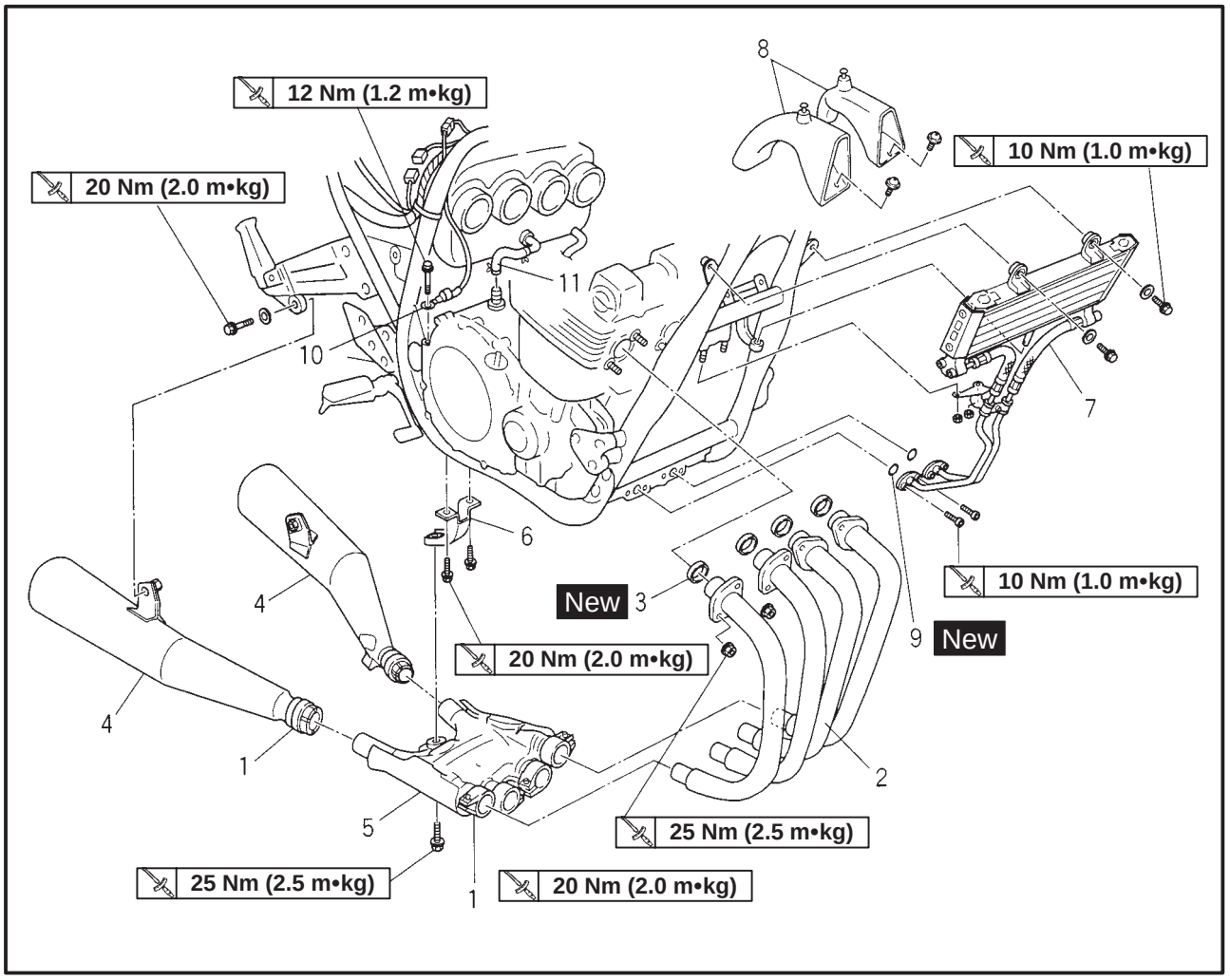

Order	Job/Part	Q'ty	Remarks
	Removing the leads, hoses and exhaust pipes		Remove the parts in the order listed.
	Seat, side cover, fuel tank		Refer to "SEAT, SIDE COVER AND FUEL TANK" in Chapter 3.
	Carburetor		Refer to "CARBURETOR" in Chapter 5.
	Engine oil		Drain
1	Exhaust band	6	
2	Exhaust pipe	4	
3	Gasket	4	
4	Muffler left/right	1/1	
5	Exhaust chamber	1	
6	Exhaust chamber bracket	1	
7	Oil cooler	1	
8	Air duct left/right	1/1	

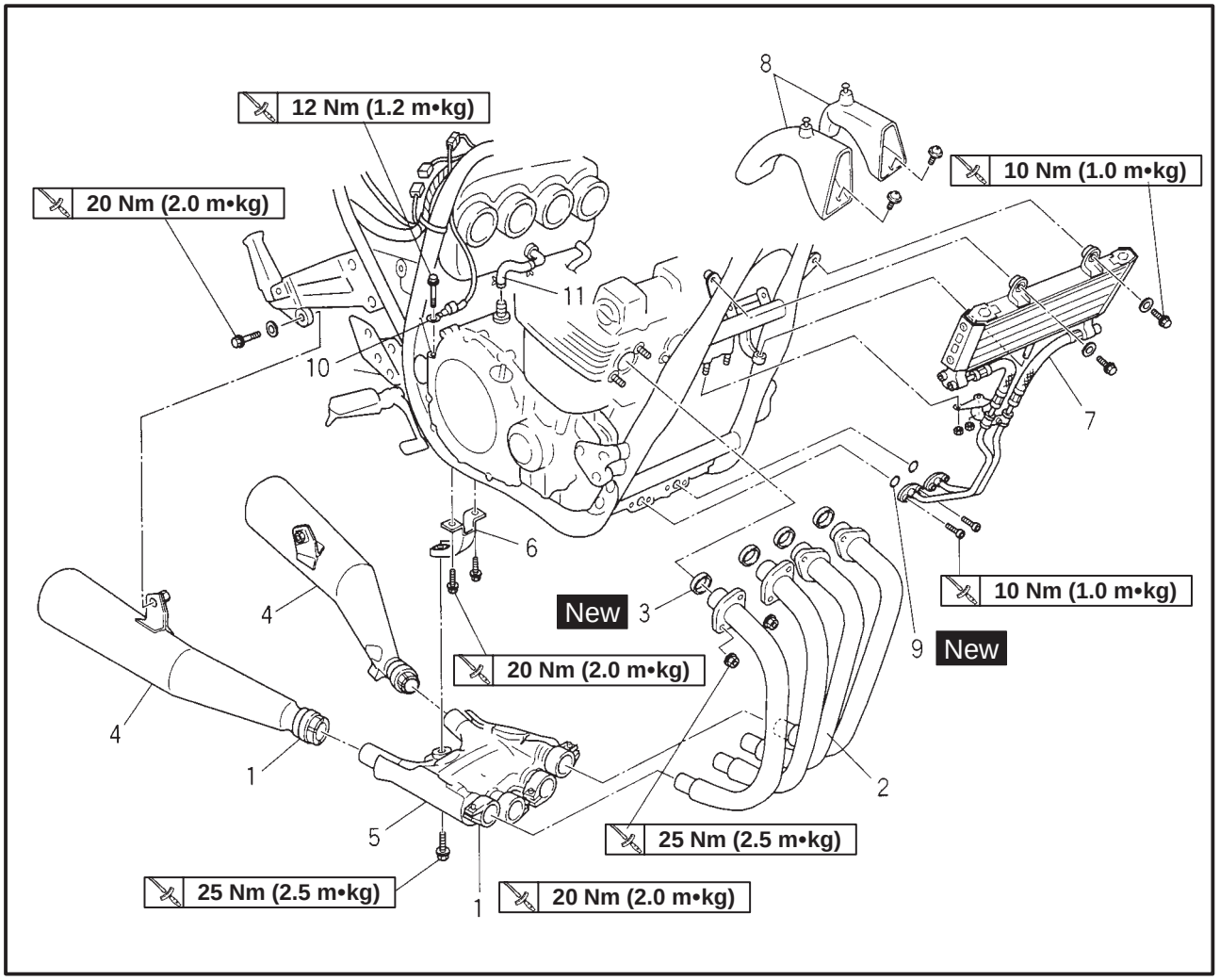

Order	Job/Part	Q'ty	Remarks
9	O-ring	2	
10	Ground lead	1	**NOTE:** Disconnect ground lead.
11	Crankcase breather hose	1	For installation, reverse the removal procedure.

EAS00190

LEADS AND DRIVE SPROCKET

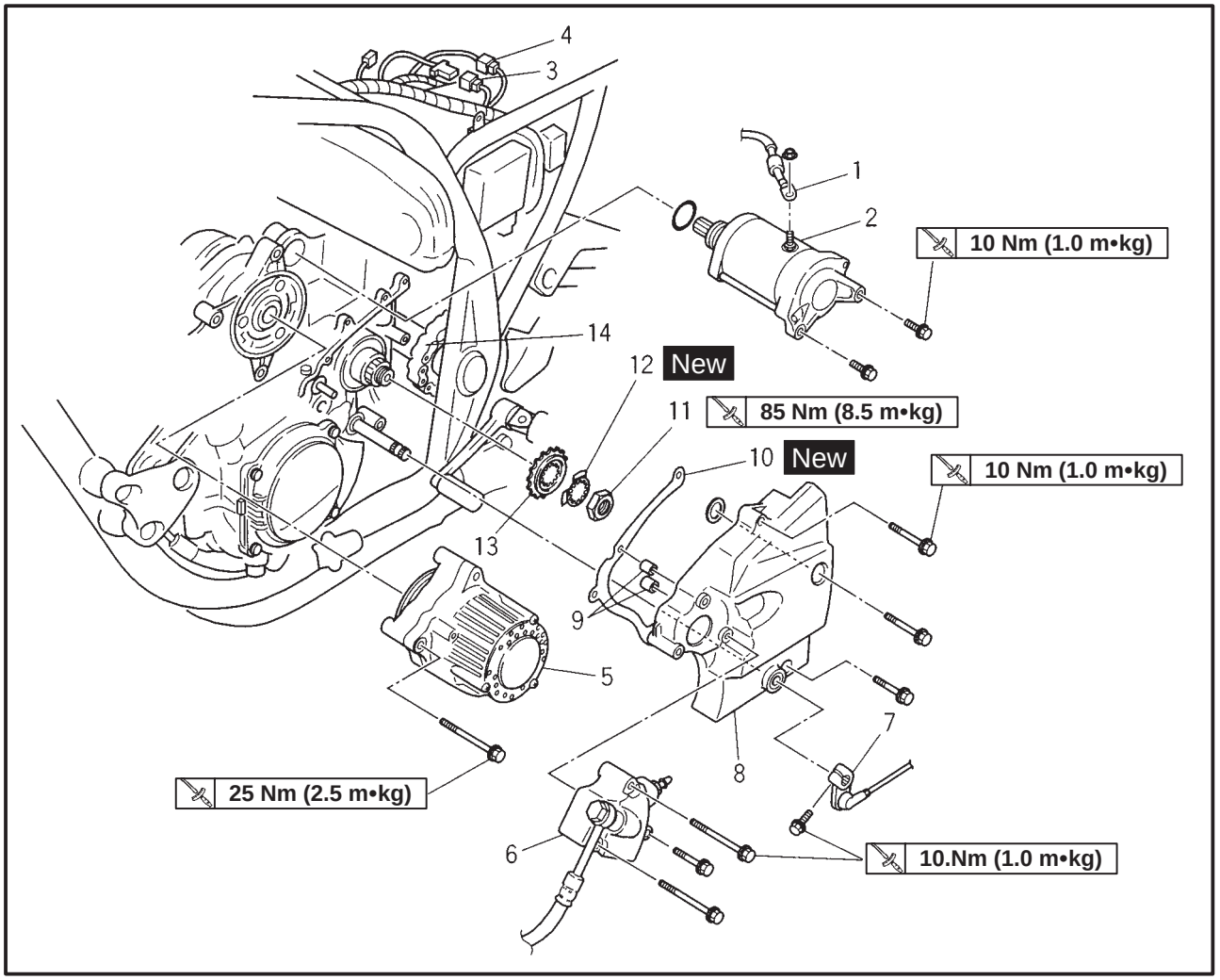

Order	Job/Part	Q'ty	Remarks
	Removing the leads and drive sprocket		Remove the parts in the order listed.
1	Starter motor lead	1	**NOTE:** Disconnect starter motor lead.
2	Starter motor	1	
3	Pickup/neutral switch lead	1	
4	A.C. generator lead	1	
5	A.C. generator	1	
6	Clutch release cylinder comp.	1	
7	Shift arm	1	Refer to "INSTALLING THE ENGINE"
8	Drive sprocket cover	1	
9	Dowel pins	2	
10	Gasket	1	
11	Nut	1	

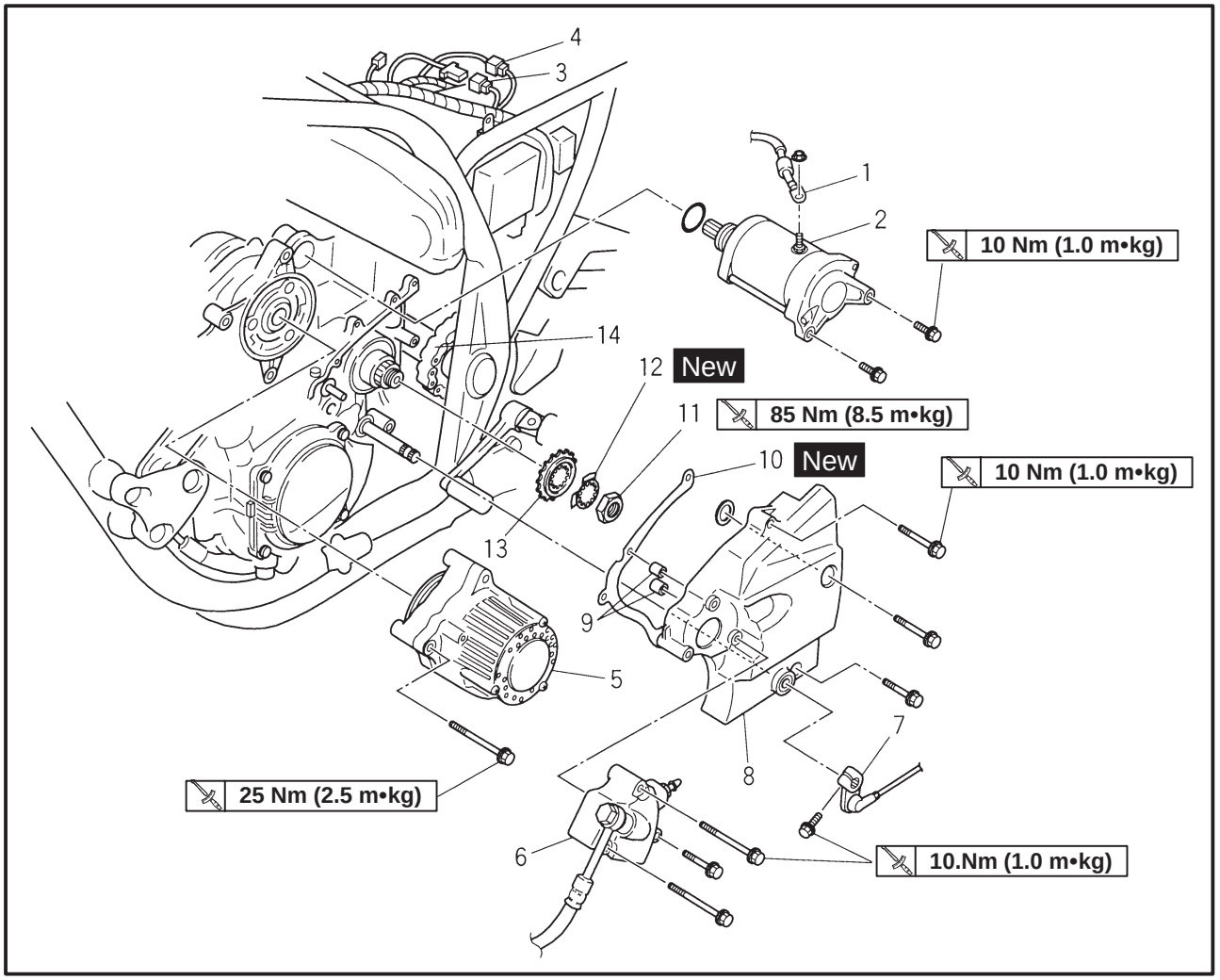

Order	Job/Part	Q'ty	Remarks
12	Lock washer	1	
13	Drive sprocket	1	
14	Drive chain	1	
			For installation, reverse the removal procedure.

ENGINE

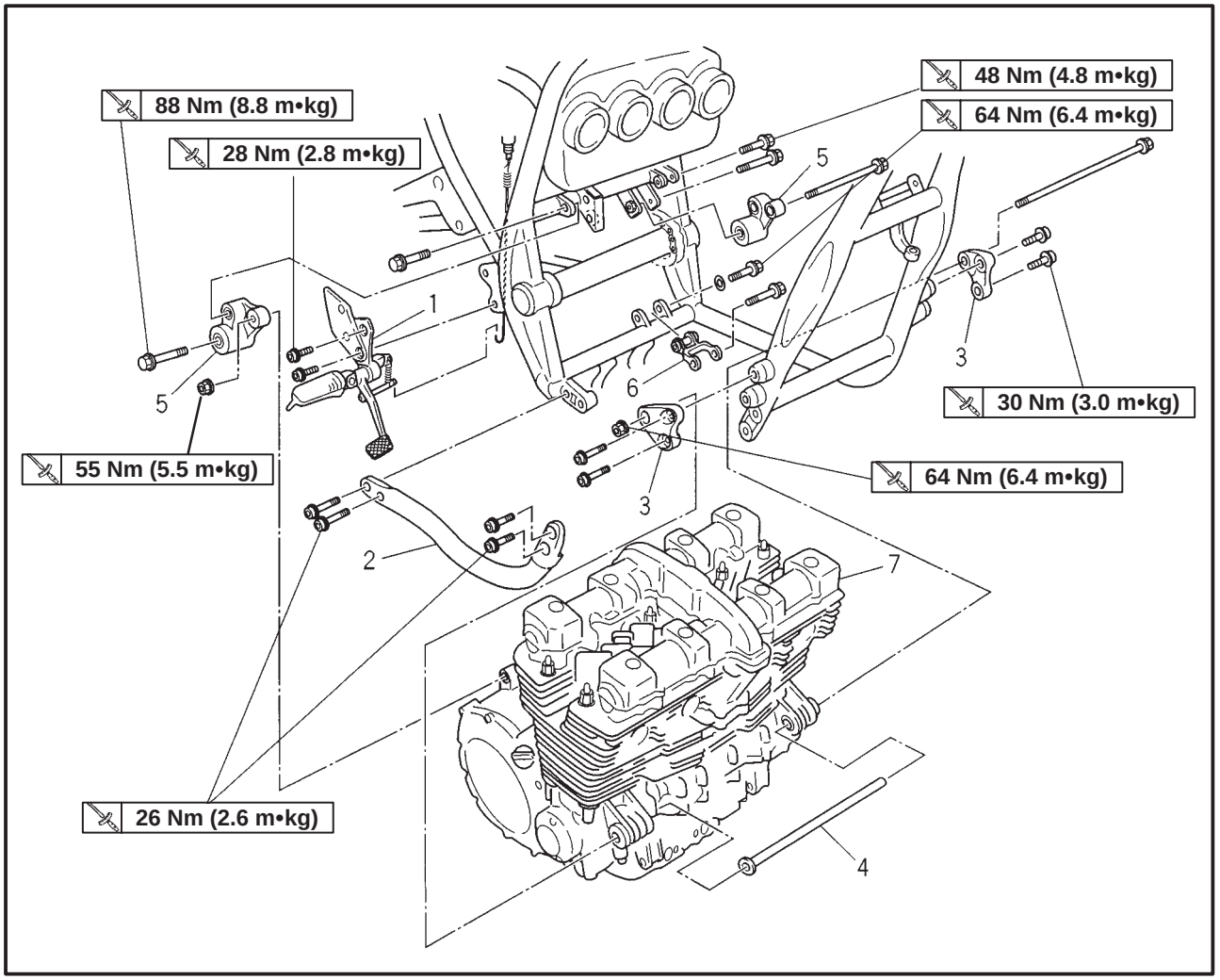

Order	Job/Part	Q'ty	Remarks
	Removing the engine		Remove the parts in the order listed.
1	Footrest	1	
2	Down tube	1	**NOTE:** Place a suitable stand under the frame and engine.
3	Engine bracket (front)	2	Refer to "INSTALLING THE ENGINE".
4	Spacer	1	
5	Engine bracket (rear upper) left, right	2	
6	Engine bracket (rear lower)	1	
7	Engine	1	
			For installation, reverse the removal procedure.

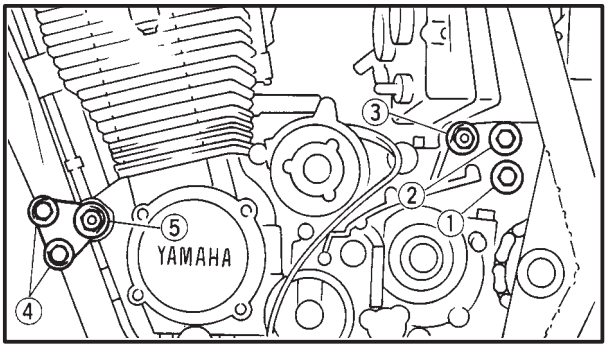

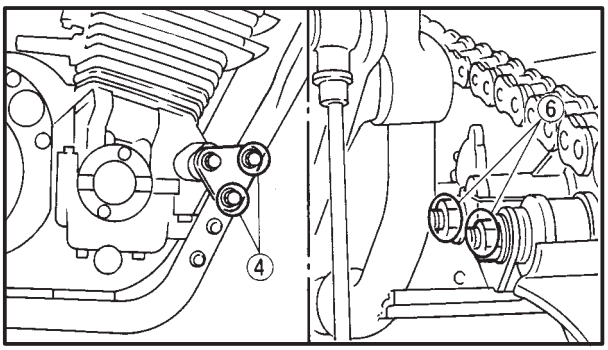

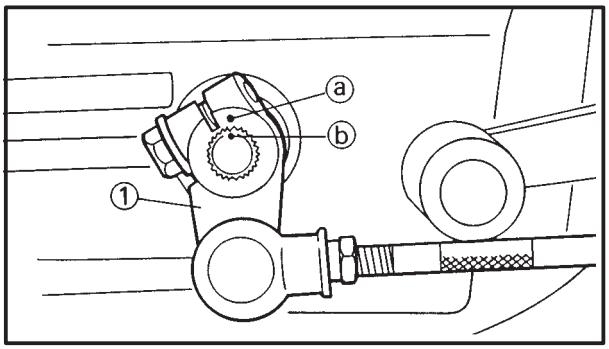

EAS00192

INSTALLING THE ENGINE

1. Tighten the bolts in the following order.

Bolt ①:
88 Nm (8.8 m•kg)
Bolt ②:
48 Nm (4.8 m•kg)
Bolt ③:
55 Nm (5.5 m•kg)
Bolt ④:
30 Nm (3.0 m•kg)
Bolt ⑤:
64 Nm (6.4 m•kg)
Nut ⑥:
64 Nm (6.4 m•kg)

2. Install:
   - shift arm ①

NOTE:

- Align the punch mark ⓑ in the shift shaft with the punched mark ⓐ on the shift arm.
- Align the bottom edge of the shift pedal with the mark on the frame-to-swingarm bracket.

Shift arm bolt
10 Nm (1.0 m•kg)

CAMSHAFT
CYLINDER HEAD COVER

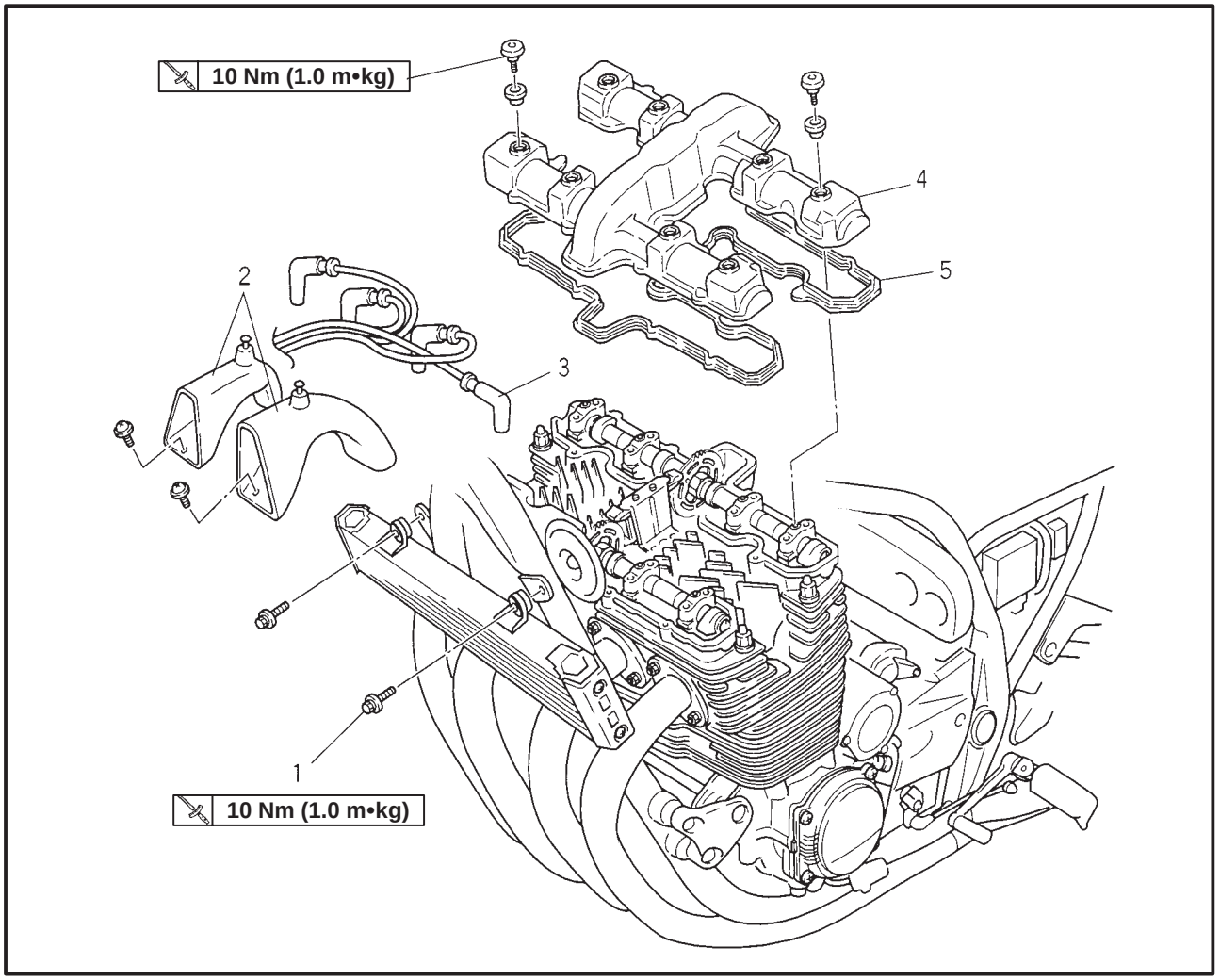

Order	Job/Part	Q'ty	Remarks
	Removing the cylinder head covers Seat, fuel tank		Remove the parts in the order listed. Refer to "SEAT, SIDE COVER AND FUEL TANK".
1	Bolts	2	
2	Air duct (left/right)	1/1	
3	Plug cap	4	
4	Cylinder head cover	1	
5	Gasket	1	
			For installation, reverse the removal procedure.

EAS00196

CAMSHAFTS

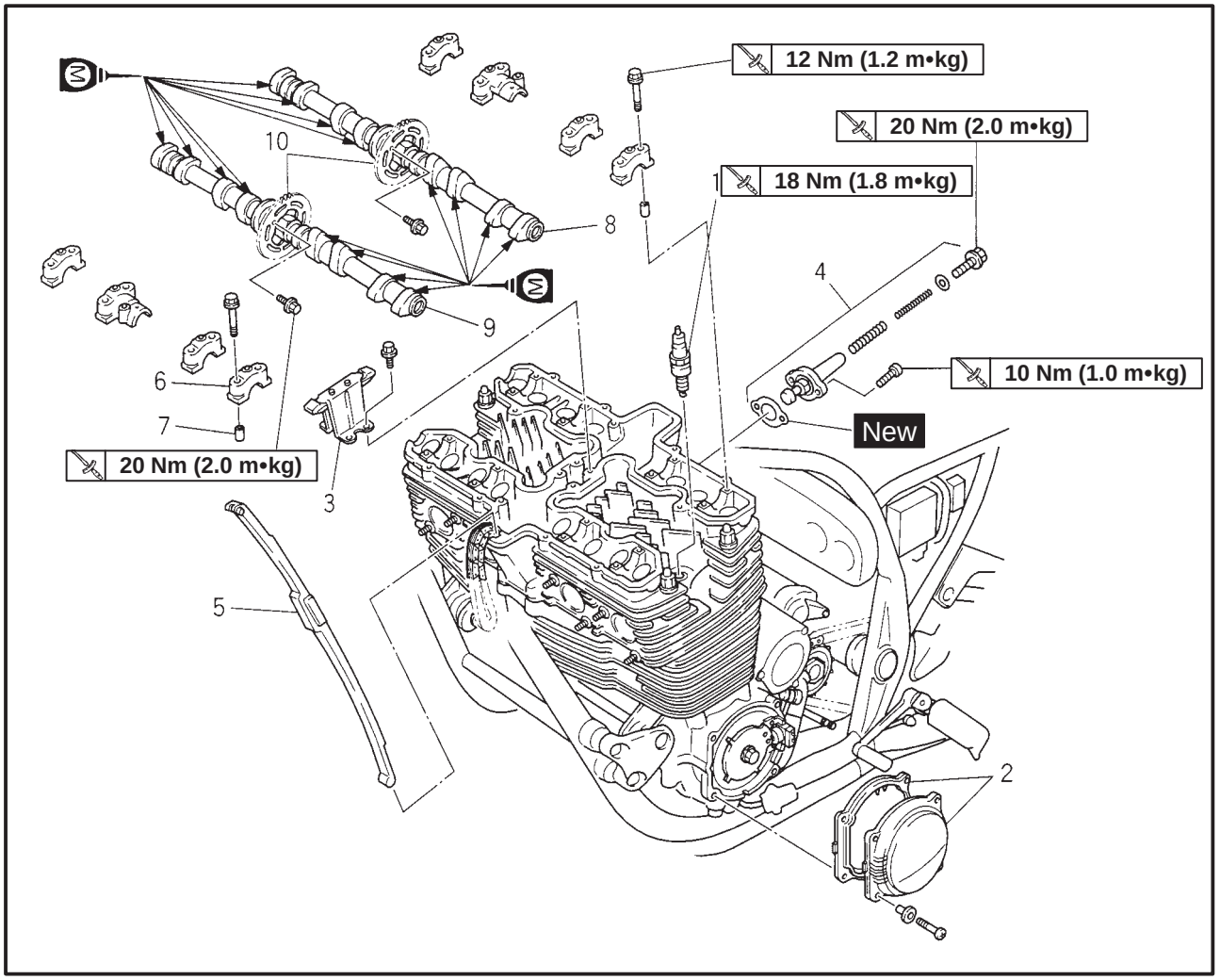

Order	Job/Part	Q'ty	Remarks
	Removing the camshafts		Remove the parts in the order listed.
1	Spark plugs	4	
2	Timing plate cover/Gasket	1/1	
3	Timing chain guide (top side)	1	
4	Timing chain tensioner assembly	1	
5	Timing chain guide (exhaust side)	1	
6	Camshaft caps	8	Refer to "REMOVING/INSTALLING THE CAMSHAFTS".
7	Dowel pins	16	
8	Camshaft (intake)	1	
9	Camshaft (exhaust)	1	
10	Camshaft sprockets	2	
			For installation, reverse the removal procedure.

EAS00199

REMOVING THE CAMSHAFTS

1. Align:
   - "T" mark on the timing plate (with the stationary pointer on the pickup coil base plate)

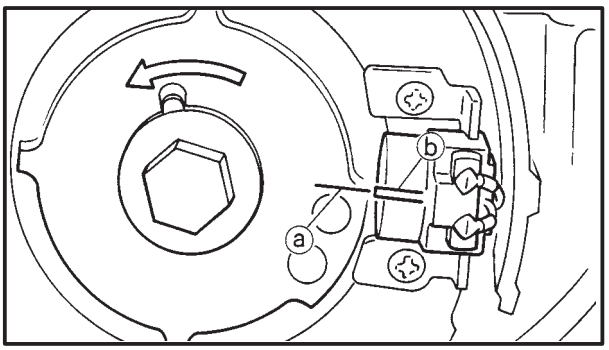

▼▼▼▼▼▼▼▼▼▼▼▼▼▼▼▼▼▼▼▼▼▼▼▼▼▼▼▼▼▼▼▼

a. Turn the crankshaft counterclockwise.
b. When piston #1 is at TDC on the compression stroke, align the "T" mark ⓐ with the pickup coil mark ⓑ.

NOTE:

TDC on the compression stroke can be found when the camshaft lobes are turned away from each other.

▲▲▲▲▲▲▲▲▲▲▲▲▲▲▲▲▲▲▲▲▲▲▲▲▲▲▲▲▲▲▲▲

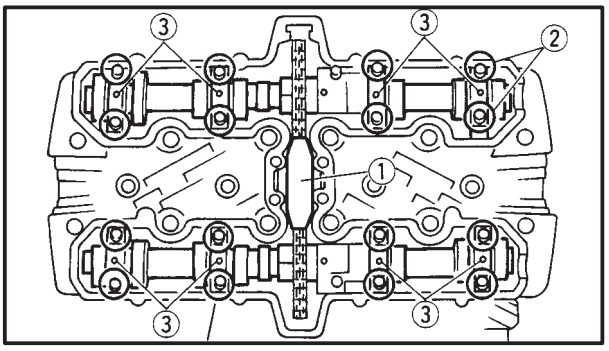

2. Remove:
   - timing chain guide (top side) ①
3. Loosen:
   - camshaft sprocket bolts
4. Loosen:
   - cap bolt ②
5. Remove:
   - timing chain tensioner

NOTE:

To prevent the timing chain from falling into the crankcase, fasten it with a wire ⑤.

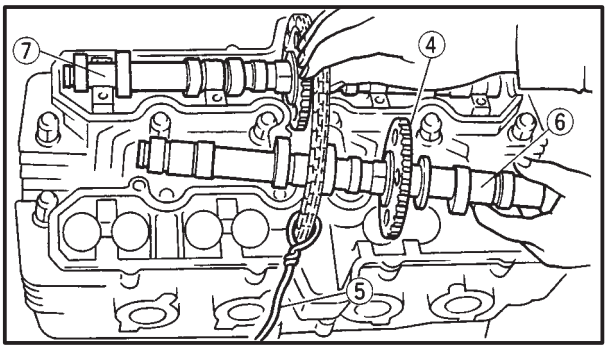

6. Remove:
   - timing chain guide (exhaust side)
   - camshaft caps ③

NOTE:

For reference during installation, put identification marks on each camshaft cap.

CAUTION:

To prevent damage to the cylinder head, camshafts or camshaft caps, loosen the camshaft cap bolts in stages and in a criss-cross pattern, working from the outside in.

7. Remove:
   - intake camshaft ⑥
   - exhaust camshaft ⑦
   - camshaft sprockets ④

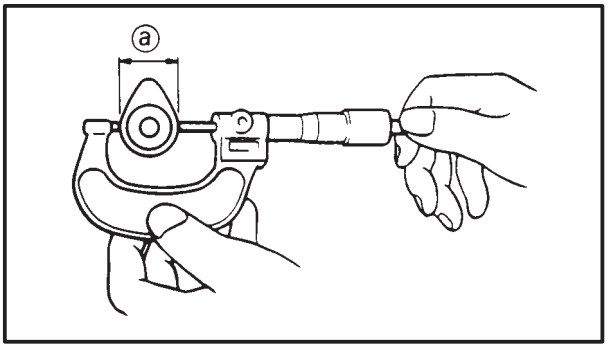

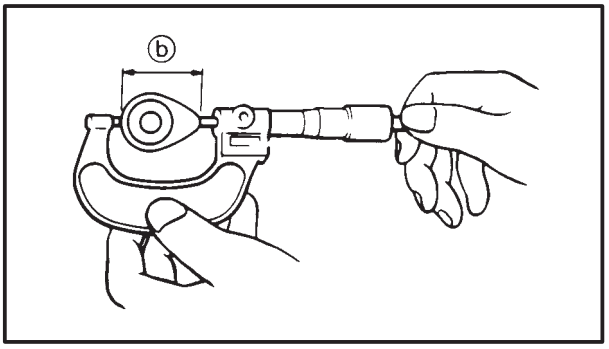

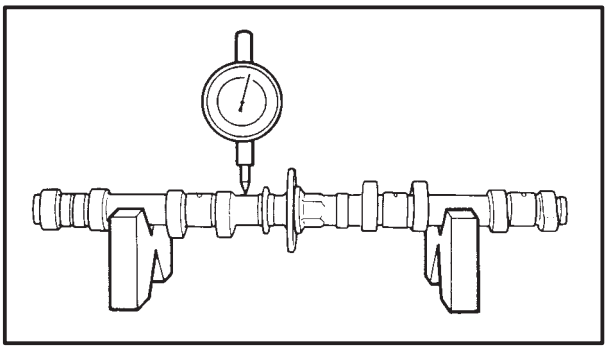

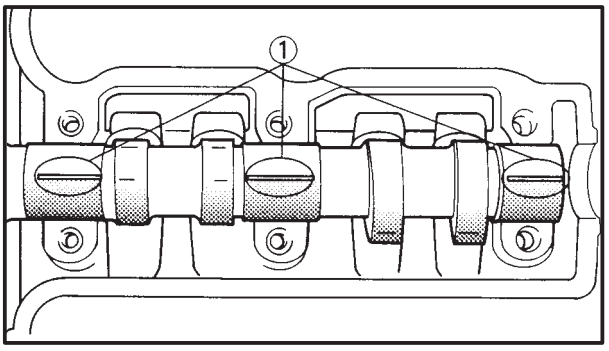

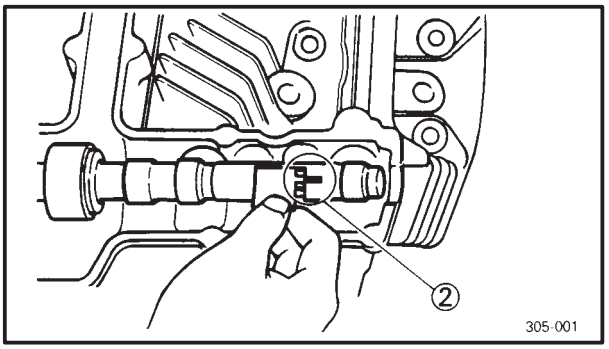

EAS000204

CHECKING THE CAMSHAFTS

1. Check:
   - camshaft lobes
     Blue discoloration/pitting/scratches → Replace the camshaft.
2. Measure:
   - camshaft lobe dimensions ⓐ and ⓑ
     Out of specification → Replace the camshaft.

Camshaft lobe dimension limit
Intake/exhaust
ⓐ Wear limit <28.15 mm>
ⓑ Wear limit <35.85 mm>

3. Measure:
   - camshaft runout
     Out of specification → Replace.

Camshaft runout
Less than 0.03 mm

4. Measure:
   - camshaft-journal-to-camshaft-cap clearance
     Out of specification → Measure the camshaft journal diameter.

Camshaft-journal-to-camshaft-cap clearance
0.020 ~ 0.054 mm

a. Install the camshaft into the cylinder head (without the dowel pins and camshaft caps).
b. Position a strip of Plastigauge® ① onto the camshaft journal as shown.
c. Install the dowel pins and camshaft caps.

NOTE:
- Tighten the camshaft cap bolts in stages and in a crisscross pattern, working from the inner caps out.
- Do not turn the camshaft when measuring the camshaft journal-to-camshaft cap clearance with the Plastigauge®.

Camshaft cap bolt
12 Nm (1.2 m•kg)

d. Remove the camshaft caps and then measure the width of the Plastigauge® ②.

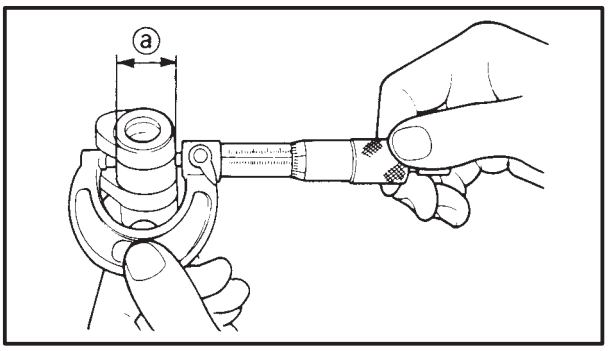

5. Measure:
   - camshaft journal diameter ⓐ
     Out of specification → Replace the camshaft.
     Within specification → Replace the cylinder head and the camshaft caps as a set.

	Camshaft journal diameter **24.967 ~ 24.980 mm**

EAS00208

CHECKING THE CAMSHAFT SPROCKETS, AND TIMING CHAIN GUIDES

The following procedure applies to all of the camshafts sprockets and timing chain guides.

1. Check:
   - camshaft sprocket
     Damage/wear → Replace the camshaft sprockets and the timing chain as a set.
2. Check:
   - timing chain guide (exhaust side)
   - timing chain guide (top side)
     Damage/wear → Replace the defective part(-s).

EAS00210

CHECKING THE TIMING CHAIN TENSIONER

1. Check:
   - timing chain tensioner
     Cracks/damage → Replace.
2. Check:
   - one-way cam operation
     Rough movement → Replace the timing chain tensioner housing.
3. Check:
   - cap bolt
   - copper washer
   - spring
   - one-way cam
   - gasket
   - timing chain tensioner rod
     Damage/wear → Replace the defective part(-s).

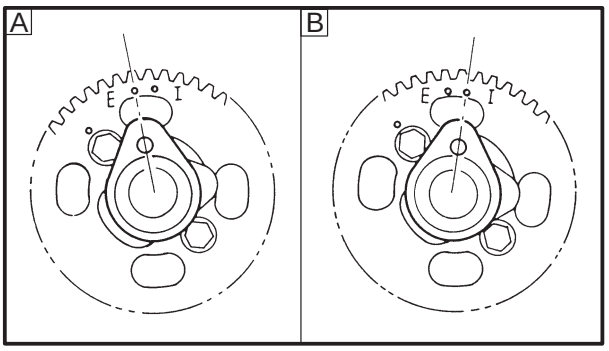

INSTALLING THE CAMSHAFTS

1. Install:
   - camshaft sprockets

NOTE:

- Be sure to set the sprockets in the specified position as shown in the figure.
- Temporarily tighten the bolts in this stage.

A Exhaust side

B Intake side

2. Install:
   - camshaft (exhaust)
   - camshaft (intake)

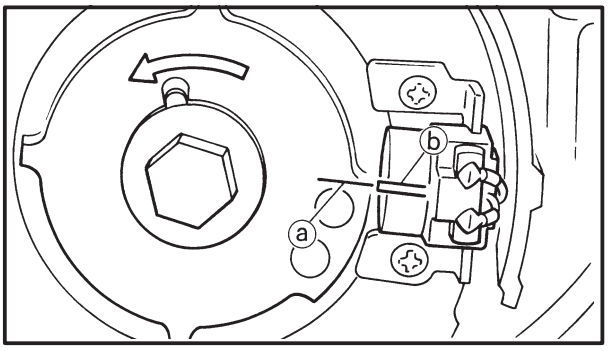

a. Turn the crankshaft counterclockwise until the TDC mark ⓐ is aligned with the pickup coil mark ⓑ.

CAUTION:

Do not turn the crankshaft during the camshafts installation. Damage or improper valve timing will result.

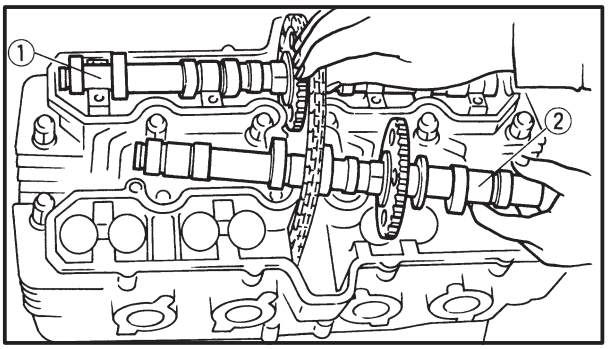

b. Fit the timing chain onto both camshaft sprockets and install the camshafts.

NOTE:

- Install the exhaust camshaft ① first, then the intake camshaft ②.
- Install the camshafts with the punched mark facing upward.
- Keep the timing chain as tense as possible on the exhaust side.

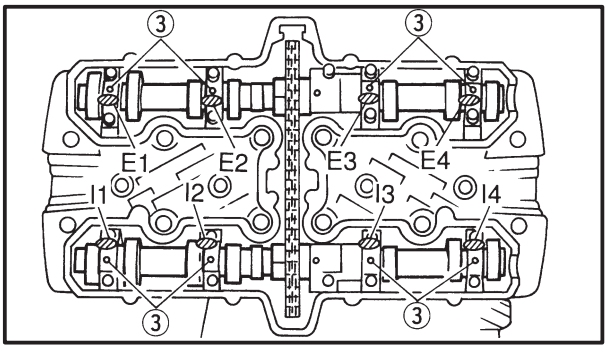

c. Install the camshaft caps ③ with dowel pins.

NOTE:

- Make sure that each camshaft cap is installed in its original place by reference to its embossed identification mark, as follows:
  Intake: I
  Exhaust: E
- Install the camshaft cap with the arrow mark pointing towards the right side of the engine.
- Temporarily tighten the bolts in this stage.

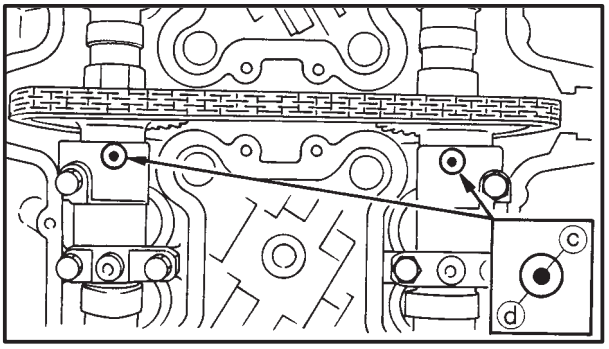

d. Check if the punched marks ⓒ on both camshafts are inside the holes of camshaft caps ⓓ. If they are not in the position, repeat the above steps.
e. Tighten the bolts (camshaft cap) in a criss-cross pattern from the inside outwards.

CAUTION:

The bolts (camshaft caps) must be tightened evenly or damage to the cylinder head, camshaft caps and camshaft will result.

	Bolt (camshaft cap): 12 Nm (1.2 m•kg)

f. Remove the safety wire from the timing chain.

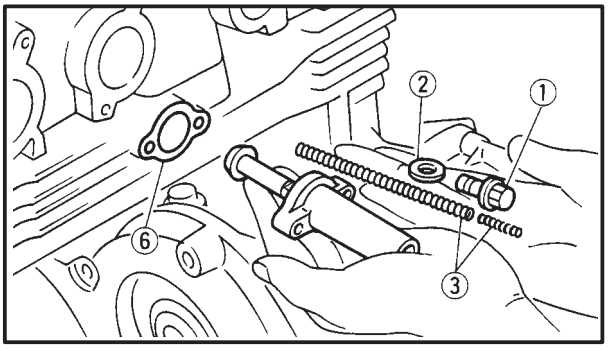

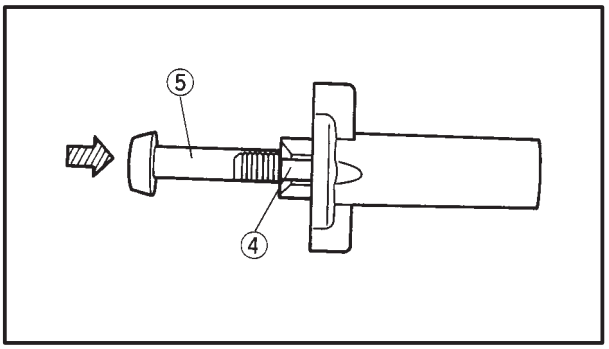

3. Install:
   - timing chain tensioner

Installation steps:

a. Remove the tensioner cap bolt ①, washer ② and springs ③.
b. Release the timing chain tensioner one-way cam ④ and push the tensioner rod ⑤ all the way into the timing chain tensioner housing.
c. Install the timing chain tensioner with a gasket ⑥ onto the cylinder.

CAUTION:

Always use a new gasket.

NOTE:

The timing chain tensioner teeth should face down.

	Timing chain tensioner bolt: 10 Nm (1.0 m•kg)

d. Install the springs ③, washer ② and cap bolt ①.

	Cap bolt (timing chain tensioner): 20 Nm (2.0 m•kg)

4. Check:
   - Valve timing
     Out of alignment → Reinstall the camshafts by referring the above steps.

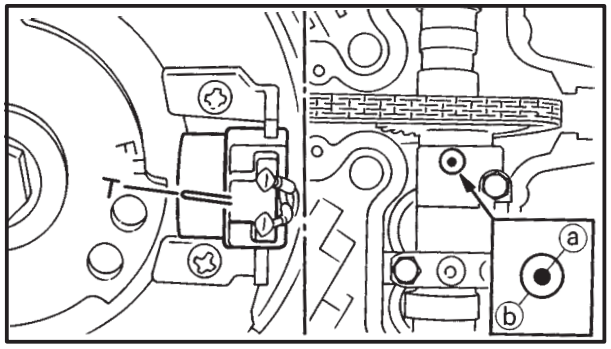

a. Turn the crankshaft counterclockwise several times until the TDC mark on the timing plate is aligned with the stationary pointer.
b. Check if both the camshaft timing punch marks ⓐ are aligning with the camshaft cap hole ⓑ.

5. Tighten:
   • Bolts (cam sprockets)

CAUTION:

Be sure to tighten the camshaft sprocket bolts to the specified torque to avoid the possibility of the bolts coming loose and damaging the engine.

	Bolts (cam sprockets): **20 Nm (2.0 m•kg)**

EAS00221
CYLINDER HEAD

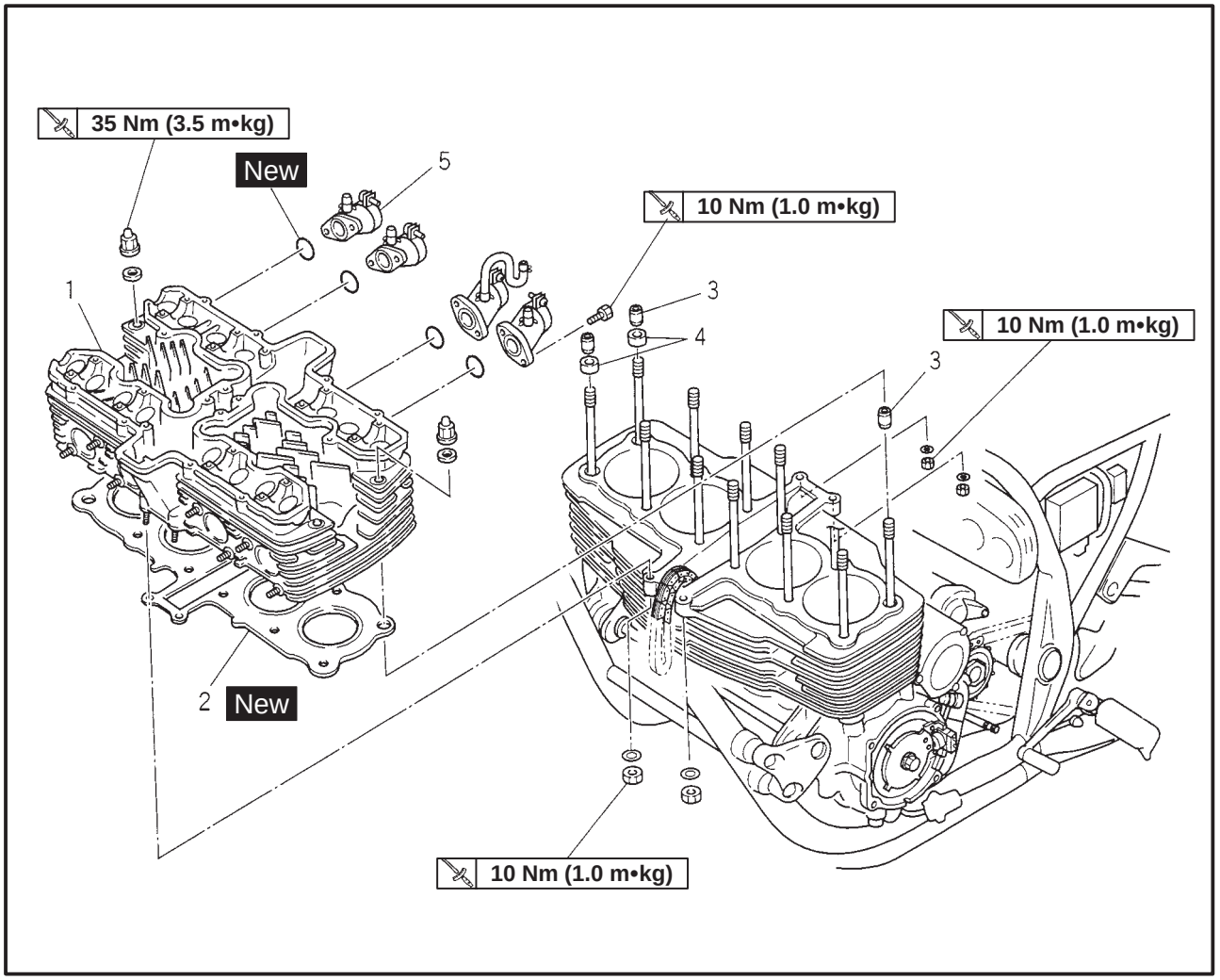

Order	Job/Part	Q'ty	Remarks
	Removing the cylinder head		Remove the parts in the order listed. **NOTE:** Remove the engine mount (front) and move the engine to front side.
	Camshafts		Refer to "CAMSHAFTS".
1	Cylinder head	1	Refer to "REMOVING/INSTALLING THE CYLINDER HEAD".
2	Gasket	1	
3	Dowel pins	2	
4	O-rings	2	
5	Intake manifold	4	
			For installation, reverse the removal procedure.

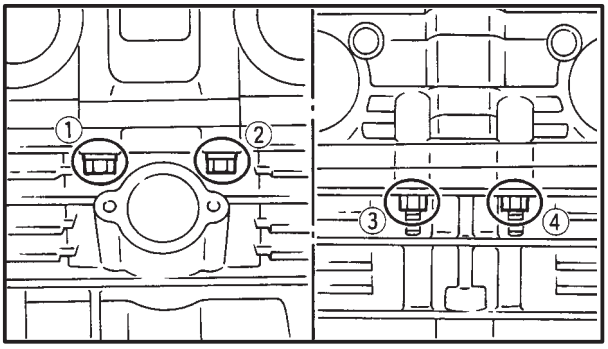

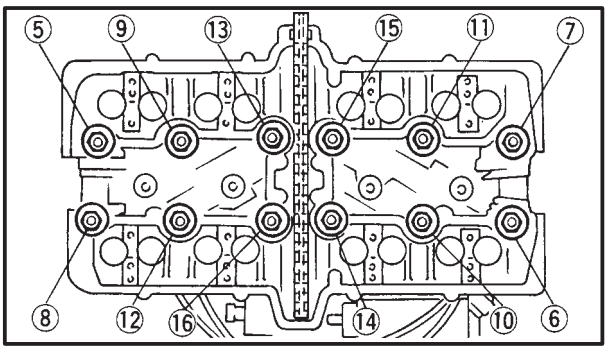

EAS00223

REMOVING THE CYLINDER HEAD

1. Remove:
   - cylinder head nuts ① ~ ⑯

NOTE:

- Loosen the nuts in the proper sequence as shown.
- Loosen each nut 1/2 of a turn at a time. After all of the nuts are fully loosened, remove them.

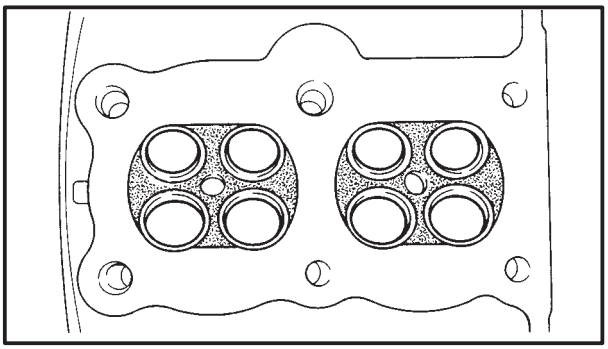

EAS00228

CHECKING THE CYLINDER HEAD

The following procedure applies to all of the cylinder heads.

1. Eliminate:
   - combustion chamber carbon deposits (with a rounded scraper)

NOTE:

Do not use a sharp instrument to avoid damaging or scratching:

- spark plug threads
- valve seats

2. Check:
   - cylinder head
     Damage/scratches → Replace.
3. Measure:
   - cylinder head warpage
     Out of specification → Resurface the cylinder head.

Cylinder head warpage
Less than 0.1 mm

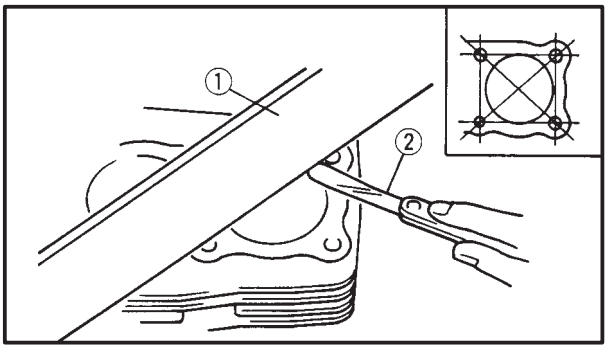

a. Place a straightedge ① and a thickness gauge ② across the cylinder head.
b. Measure the warpage.
c. If the limited is exceeded, resurface the cylinder head as follows.
d. Place a 400 ~ 600 grit wet sandpaper on the surface plate and resurface the cylinder head using a figure-eight sanding pattern.

NOTE:

To ensure an even surface, rotate the cylinder head several times.

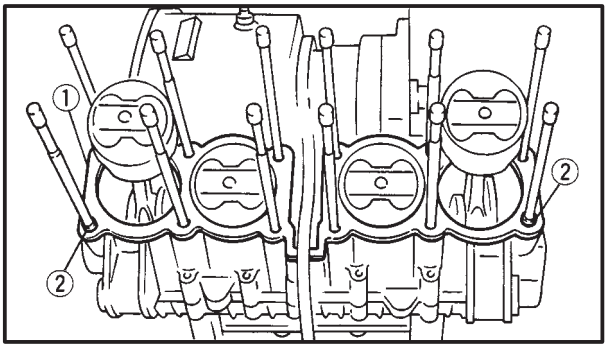

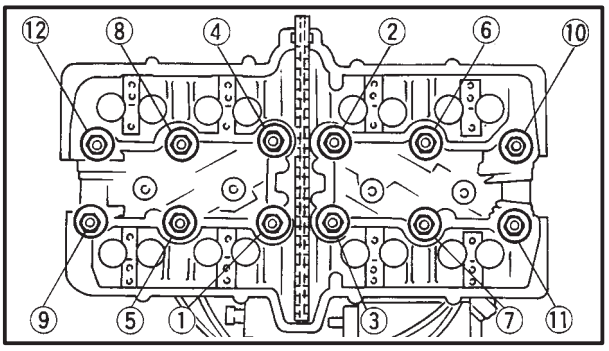

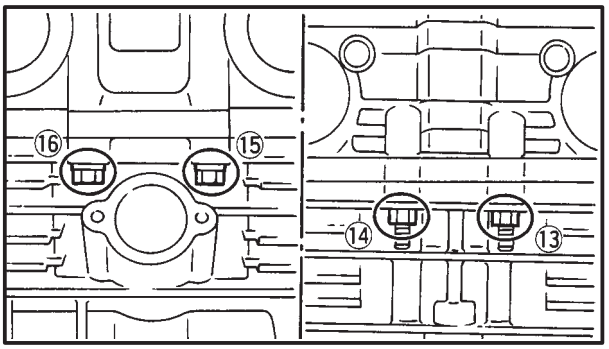

EAS00232

INSTALLING THE CYLINDER HEAD

1. Install:
   - gasket (New) ①
   - dowel pins ②
2. Install:
   - cylinder head
   - washers
   - copper washers
   - cylinder head nuts

NOTE:

- Apply engine oil onto the threads of the cylinder head nuts.
- Tighten the cylinder head nuts in the proper tightening sequence as shown and torque them in two stages.

Cylinder head Cap nut
35 Nm (3.5 m•kg)
Cylinder head nut
10 Nm (1.0 m•kg)

3. Install:
   - exhaust camshaft
   - intake camshaft

   Refer to “INSTALLING THE CAMSHAFTS”.

EAS00236
VALVES AND VALVE SPRINGS

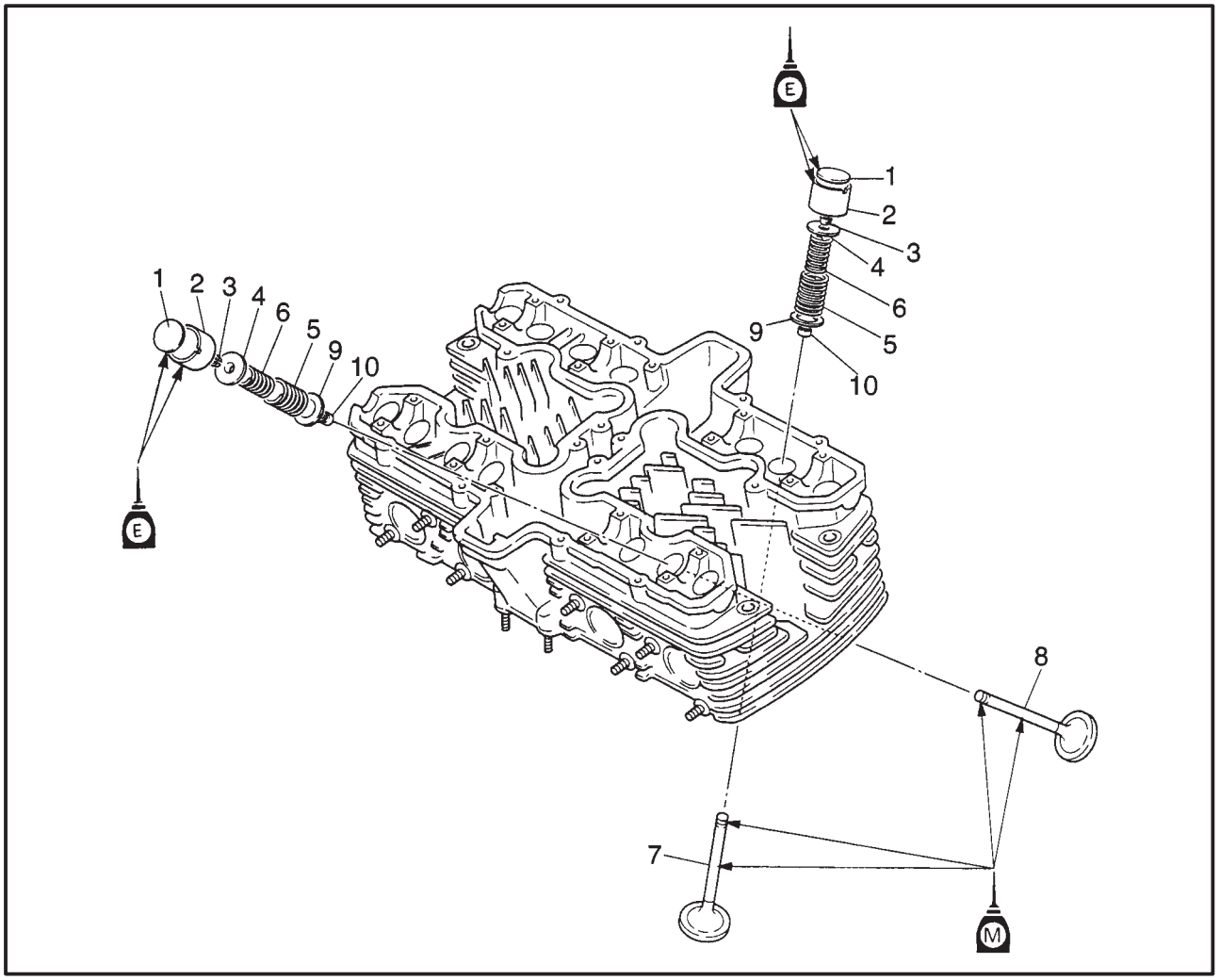

Order	Job/Part	Q'ty	Remarks
	Removing the valves and valve springs		Remove the parts in the order listed.
	Camshaft		Refer to "CAMSHAFTS".
	Cylinder head		Refer to "CYLINDER HEAD".
1	Valve pads	16	
2	Valve lifters	16	
3	Valve cotters	32	
4	Upper springs seats	16	
5	Valve springs (outer)	16	Refer to "REMOVING/INSTALLING THE VALVES".
6	Valve springs (inner)	16	
7	Intake valves	8	
8	Exhaust valves	8	
9	Lower spring seats	16	
10	Oil seals	16	
			For installation, reverse the removal procedure.

EAS00237

REMOVING THE VALVES

The following procedure applies to all of the valves and related components.

NOTE:

Before removing the internal parts of the cylinder head (e.g., valves, valve springs, valve seats), make sure that the valves properly seal.

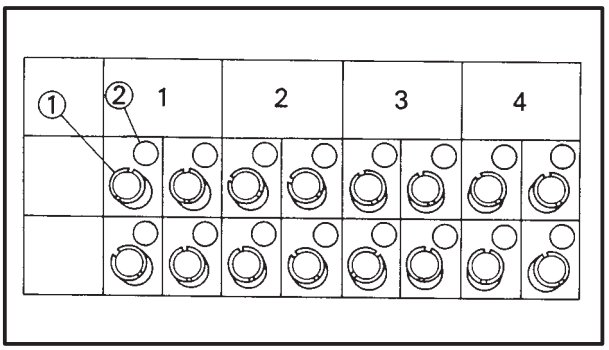

1. Remove:
   - valve lifter ①
   - valve pad ②

NOTE:

Make a note of the position of each valve lifter and valve pad so that they can be reinstalled in their original place.

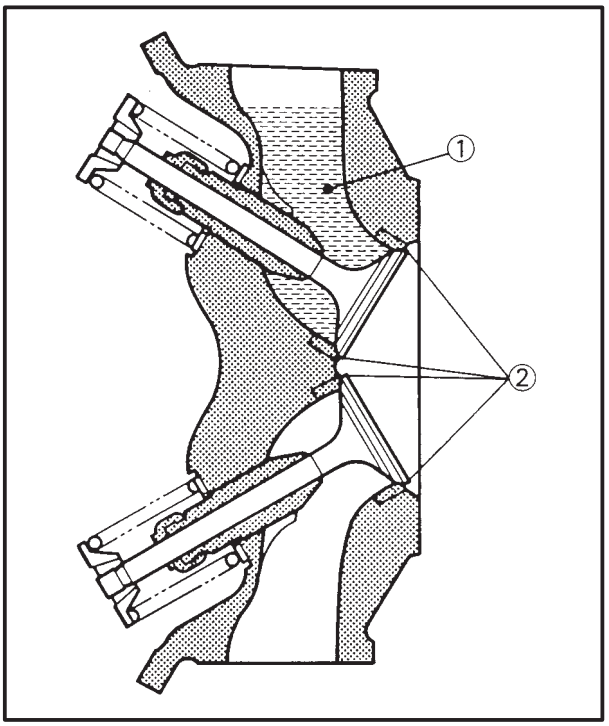

2. Check:
   - valve sealing
     Leakage at the valve seat → Check the valve face, valve seat, and valve seat width.
     Refer to “CHECKING THE VALVE SEATS”.

▼▼▼▼▼▼▼▼▼▼▼▼▼▼▼▼▼▼▼▼▼▼▼▼▼▼▼▼▼▼▼▼

a. Pour a clean solvent ① into the intake and exhaust ports.
b. Check that the valves properly seal.
   There should be no leakage at the valve seat ②.

▲▲▲▲▲▲▲▲▲▲▲▲▲▲▲▲▲▲▲▲▲▲▲▲▲▲▲▲▲▲▲▲

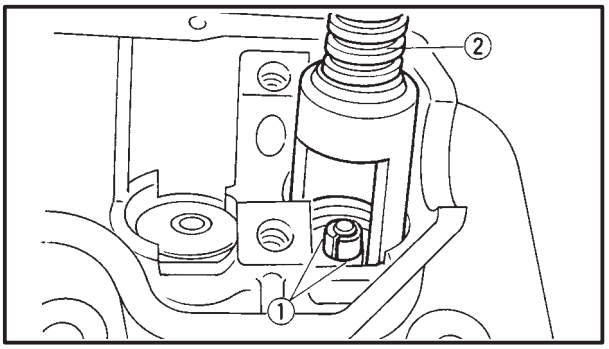

3. Remove:
   - valve cotters ①

NOTE:

Remove the valve cotters by compressing the valve spring with the valve spring compressor ②.

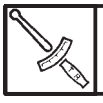	**Valve spring compressor** **90890-04019**

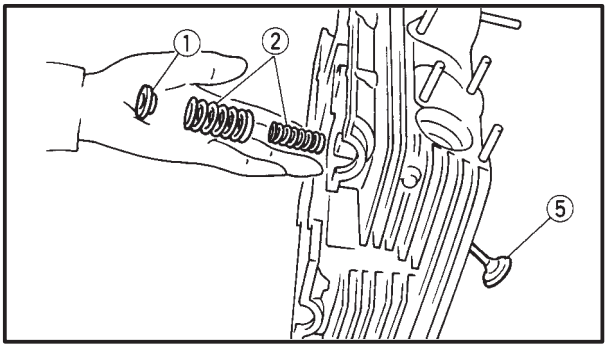

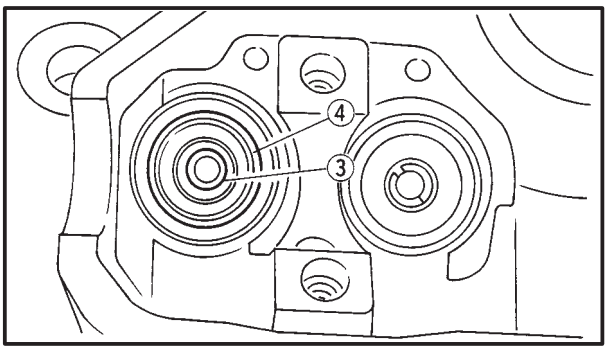

4. Remove:
   - upper spring seat ①
   - valve springs ②
   - oil seal ③
   - lower spring seat ④
   - valve ⑤

NOTE:

Identify the position of each part very carefully so that it can be reinstalled in its original place.

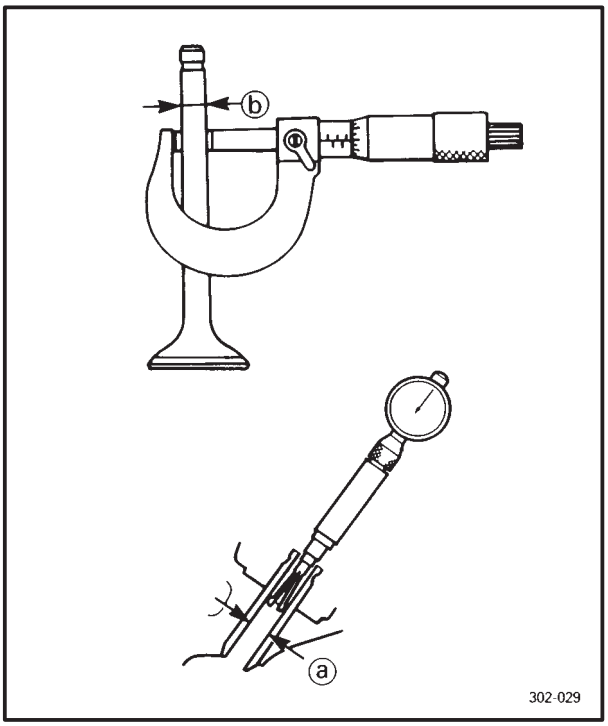

EAS00239

CHECKING THE VALVES AND VALVE GUIDES

The following procedure applies to all of the valves and valve guides.

1. Measure:
   - valve-stem to valve guide clearance

Valve-stem to valve-guide clearance = Valve guide inside diameter ⓐ – Valve stem diameter ⓑ

Out of specification → Replace the valve guide.

Valve-stem to valve-guide clearance
Intake
0.010 ~ 0.037 mm
Limit: 0.08 mm
Exhaust
0.025 ~ 0.052 mm
Limit: 0.10 mm

2. Replace:
   - valve guide

NOTE:

To ease valve guide removal and installation, and to maintain the correct fit, heat the cylinder head to 100°C (212°F) in an oven.

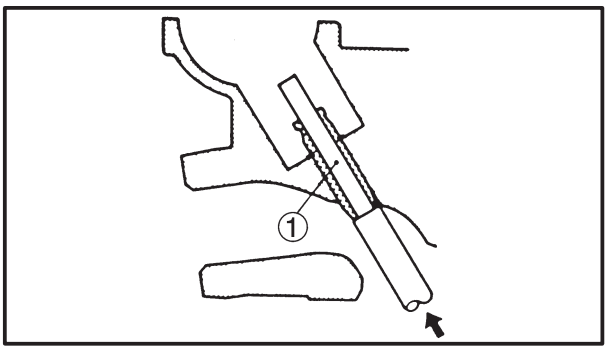

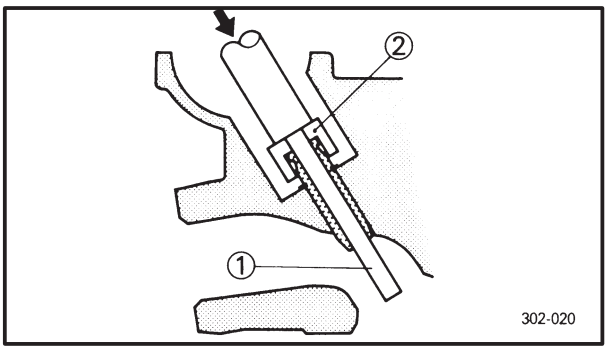

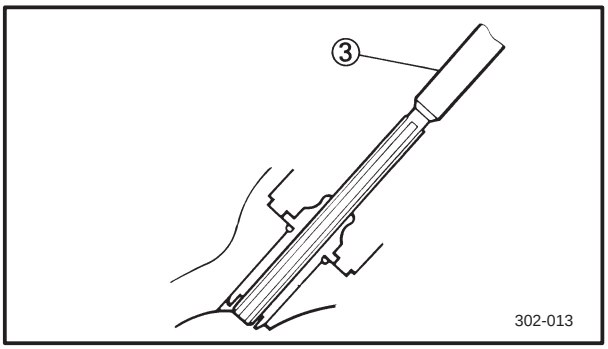

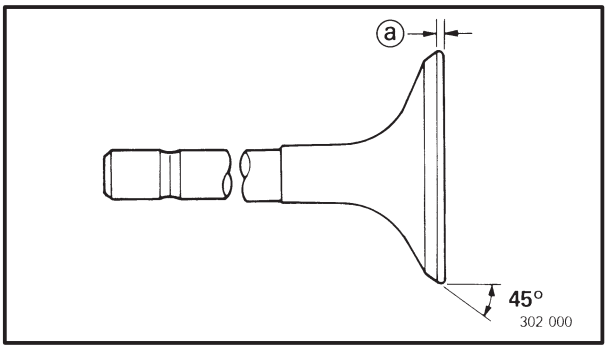

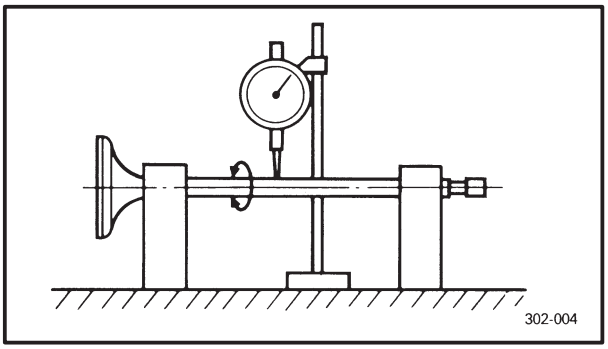

a. Remove the valve guide with a valve guide remover ①.
b. Install the new valve guide with a valve guide installer ② and valve guide remover ①.
c. After installing the valve guide, bore the valve guide with a valve guide reamer ③ to obtain the proper valve-stem to valve-guide clearance.

NOTE:

After replacing the valve guide, reface the valve seat.

Valve guide remover, reamer & installer
(5.5 mm): 90890-04016

3. Eliminate:
   - carbon deposits
     (from the valve face and valve seat)
4. Check:
   - valve face
     Pitting/wear → Grind the valve face.
   - valve stem end
     Mushroom shape or diameter larger than the body of the valve stem → Replace the valve.
5. Measure:
   - valve margin thickness ⓐ
     Out of specification → Replace the valve.

Valve margin thickness
0.8 mm ~ 1.2 mm

6. Measure:
   - valve stem runout
     Out of specification → Replace the valve.

NOTE:

- When installing a new valve, always replace the valve guide.
- If the valve is removed or replaced, always replace the oil seal.

Valve stem runout
0.01 mm

EAS00240

CHECKING THE VALVE SEATS

The following procedure applies to all of the valves and valve seats.

1. Eliminate:
   - carbon deposits
     (from the valve face and valve seat)
2. Check:
   - valve seat
     Pitting/wear → Replace the cylinder head.
3. Measure:
   - valve seat width ⓐ
     Out of specification → Replace the cylinder head.

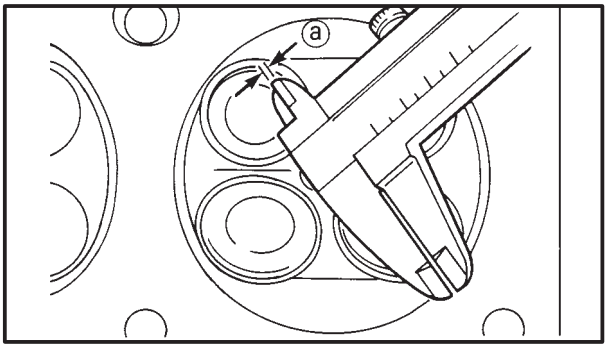

Valve seat width
Intake: 0.9 ~ 1.1 mm
Exhaust: 0.9 ~ 1.1 mm

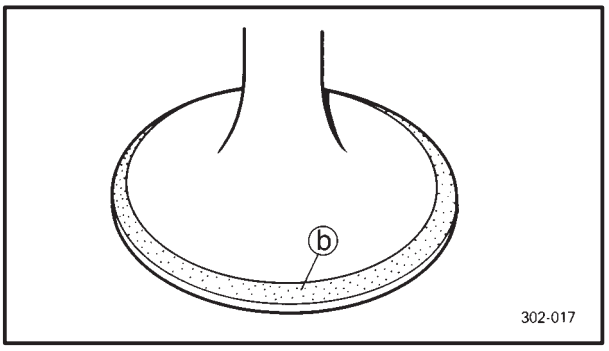

a. Apply Mechanic's blueing dye (Dykem) ⓑ onto the valve face.
b. Install the valve into the cylinder head.
c. Press the valve through the valve guide and onto the valve seat to make a clear pattern.
d. Measure the valve seat width. Where the valve seat and valve face contacted one another, the blueing will have been removed.

4. Lap:
   - valve face
   - valve seat

NOTE:

After replacing the cylinder head or replacing the valve and valve guide, the valve seat and valve face should be lapped.

a. Apply a coarse lapping compound ⓐ to the valve face.

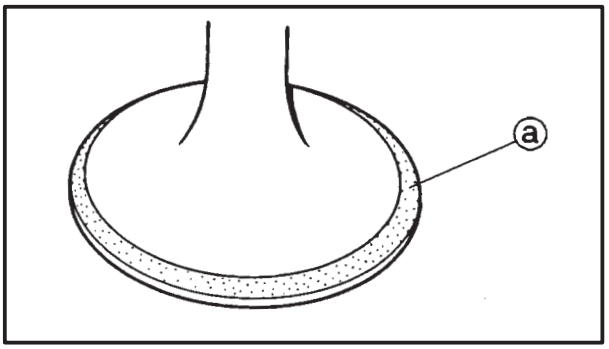

CAUTION:

Do not let the lapping compound enter the gap between the valve stem and the valve guide.

b. Apply molybdenum disulfide oil onto the valve stem.
c. Install the valve into the cylinder head.

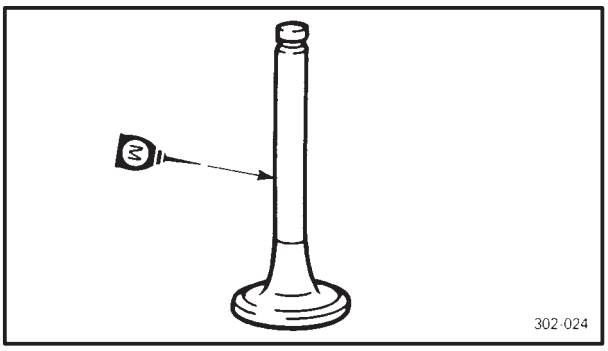

d. Turn the valve until the valve face and valve seat are evenly polished, then clean off all of the lapping compound.

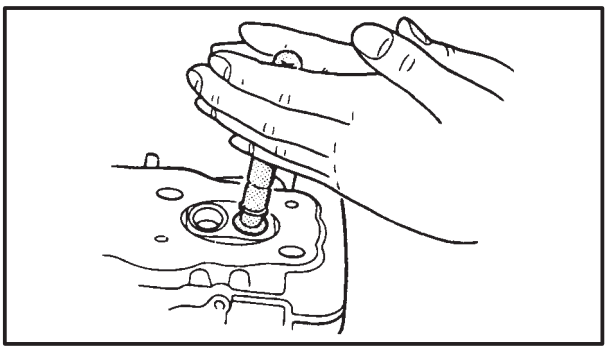

NOTE:

For the best lapping results, lightly tap the valve seat while rotating the valve back and forth between your hand.

e. Apply a fine lapping compound to the valve face and repeat the above steps.

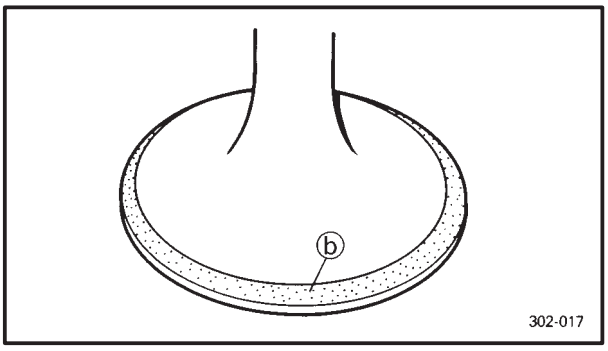

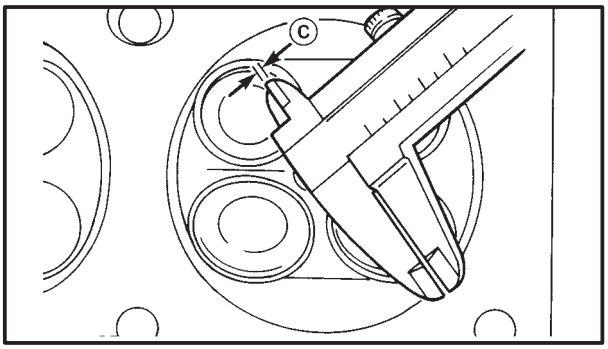

f. After every lapping procedure, be sure to clean off all of the lapping compound from the valve face and valve seat.
g. Apply Mechanic's blueing dye (Dykem) ⓑ onto the valve face.
h. Install the valve into the cylinder head.
i. Press the valve through the valve guide and onto the valve seat to make a clear impression.
j. Measure the valve seat width ⓒ again. If the valve seat width is out of specification, reface and lap the valve seat.

▲▲▲▲▲▲▲▲▲▲▲▲▲▲▲▲▲▲▲▲▲▲▲▲▲▲▲▲▲▲▲▲

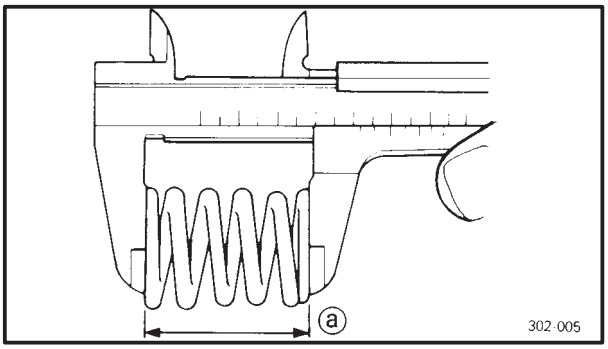

EAS00241

CHECKING THE VALVE SPRINGS

The following procedure applies to all of the valve springs.

1. Measure:
   - valve spring free length ⓐ
     Out of specification → Replace the valve spring.

Valve spring free length (intake and exhaust)
Inner spring <Limit>
39.65 mm <37.5 mm>
Outer spring <Limit>
41.1 mm <39 mm>

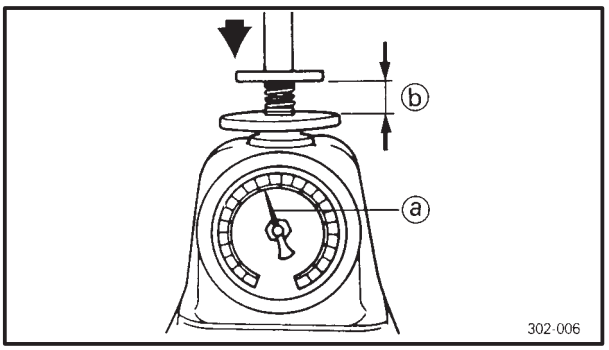

2. Measure:
   - compressed spring force ⓐ
     Out of specification → Replace the valve spring.

ⓑ Installed length

Compressed spring force
Intake and exhaust inner spring
61.7～72.5 N (6.29 ～ 7.39 kg)
at 32.8 mm
Intake and exhaust outer spring
130.4～154.0 N (13.3 ～ 15.7 kg)
at 34.8 mm

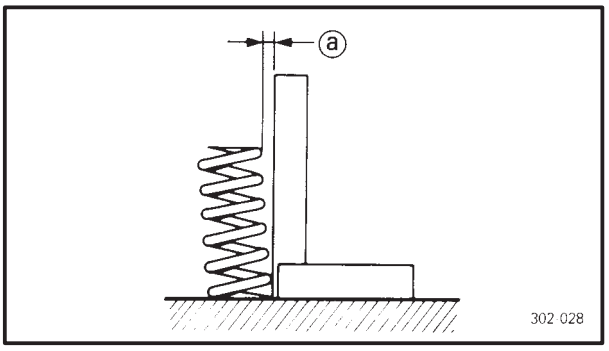

3. Measure:
   - valve spring tilt ⓐ
     Out of specification → Replace the valve spring.

Spring tilt limit
Intake and exhaust inner spring
2.5°/1.7 mm
Intake and exhaust outer spring
2.5°/1.7 mm

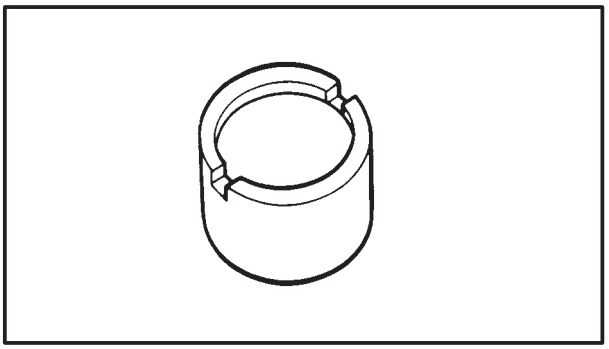

EAS00242

CHECKING THE VALVE LIFTERS

The following procedure applies to all of the valve lifters.

1. Check:
   - valve lifter
     Damage/scratches → Replace the valve lifters and cylinder head.

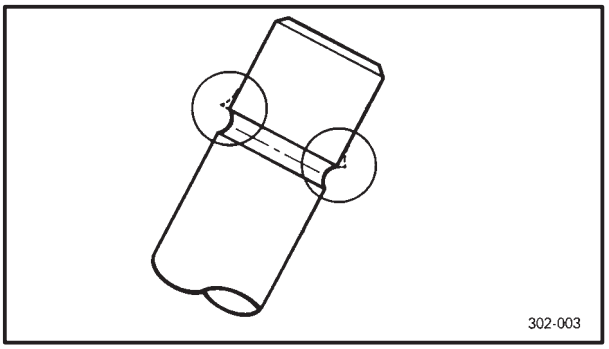

EAS00245

INSTALLING THE VALVES

The following procedure applies to all of the valves and related components.

1. Deburr:
   - valve stem end
     (with an oil stone)

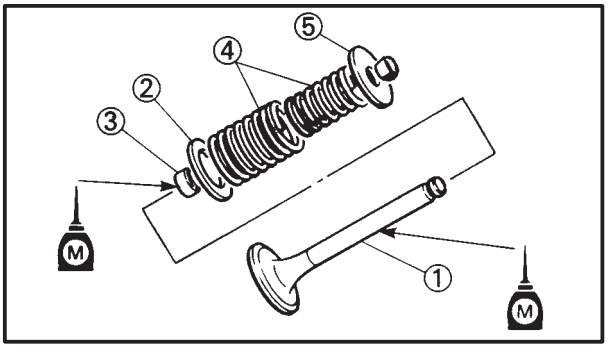

	Recommended lubricant **Molybdenum disulfide oil**

2. Install:
   - valve ①
   - lower spring seat ②
   - oil seal ③
   - valve springs ④
   - upper spring seat ⑤
     (into the cylinder head)

NOTE:

Install the valve spring with the larger pitch ⓐ facing up.

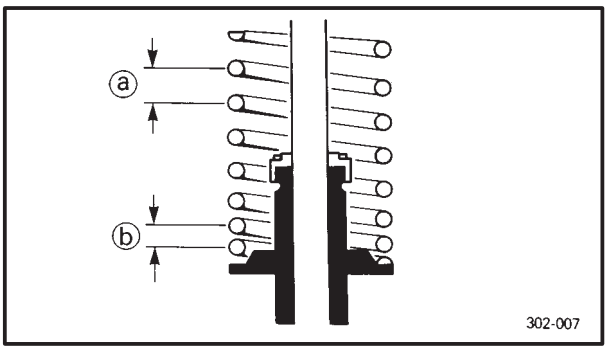

ⓑ Smaller pitch

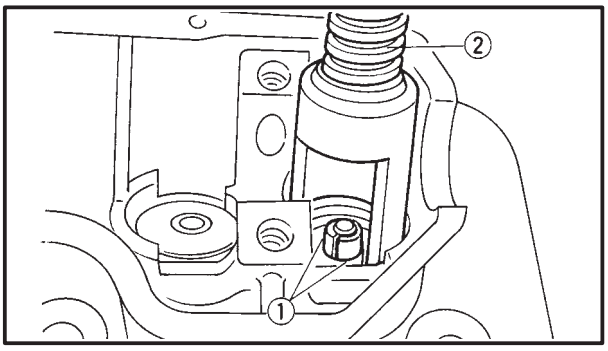

3. Install:
   - valve cotters ①

NOTE:

Install the valve cotters by compressing the valve spring with the valve spring compressor ②.

	Valve spring compressor **90890-04019**

4. To secure the valve cotters ① onto the valve stem, lightly tap the valve tip with a soft-face hammer.

CAUTION:

Hitting the valve tip with excessive force could damage the valve.

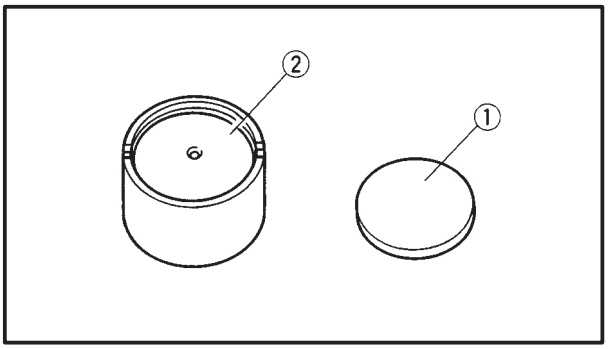

5. Install:
   - valve pad ①
   - valve lifter ②

NOTE:

- Apply molybdenum disulfide oil onto the valve lifter and valve pad.
- The valve lifter must move smoothly when rotated with a finger.
- Each valve lifter and valve pad must be reinstalled in its original position.

EAS00252
CYLINDERS AND PISTONS

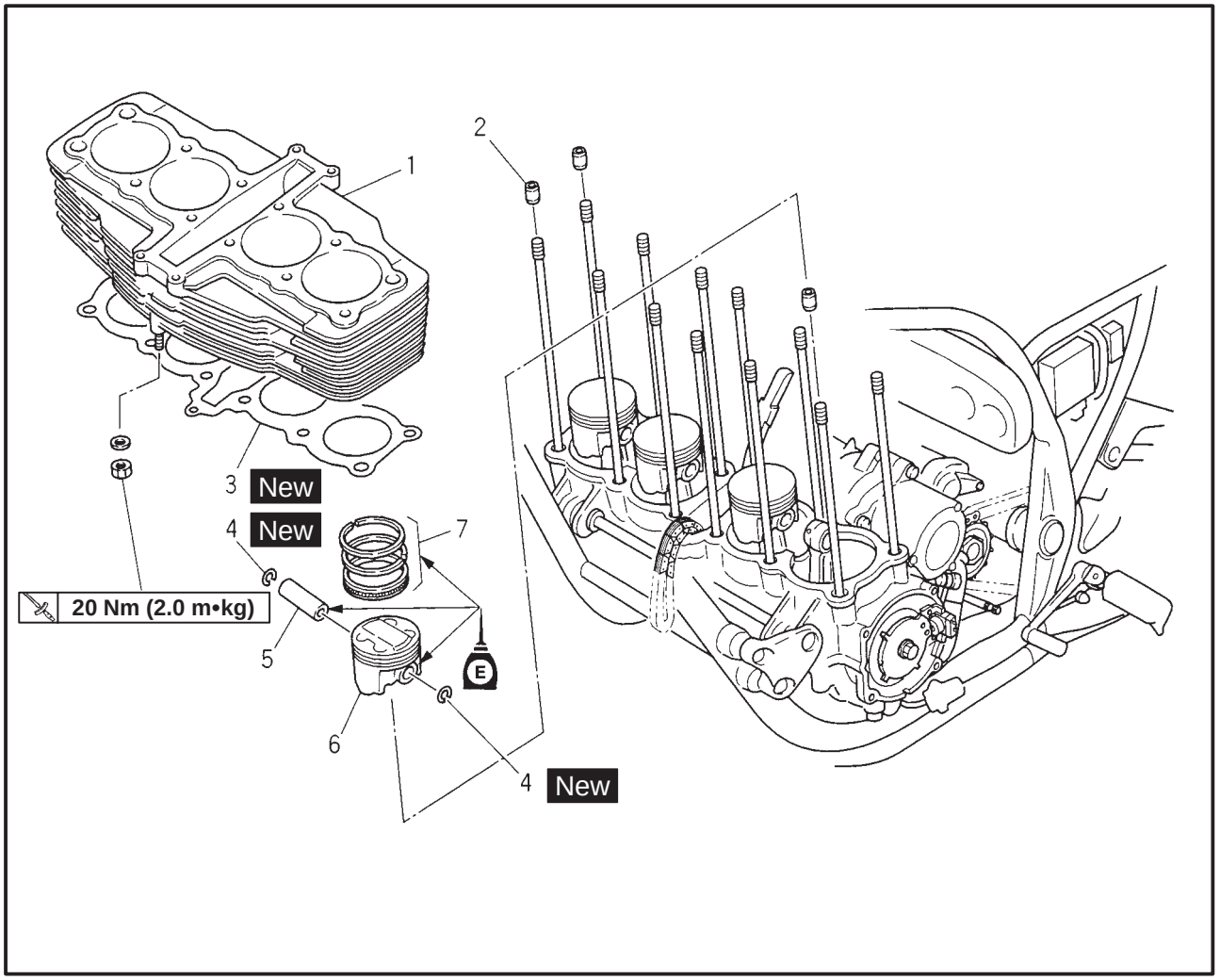

Order	Job/Part	Q'ty	Remarks
	Removing the cylinders and pistons		Remove the parts in the order listed.
	Cylinder head		Refer to "CYLINDER HEAD".
1	Cylinder block	1	Refer to "REMOVING/INSTALLING THE CYLINDERS AND PISTONS".
2	Dowel pins	2	
3	Gasket	1	
4	Piston pin clips	8	
5	Piston pins	4	
6	Pistons	4	
7	Oil ring sets	4	
			For installation, removal procedure.

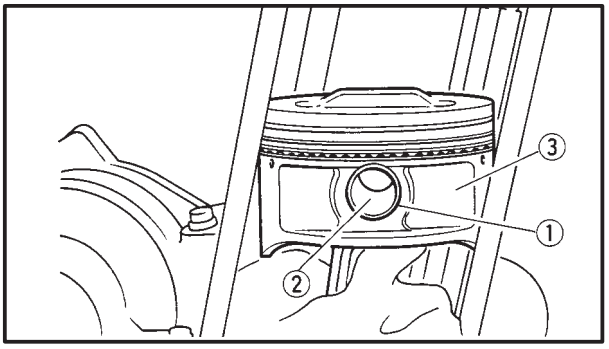

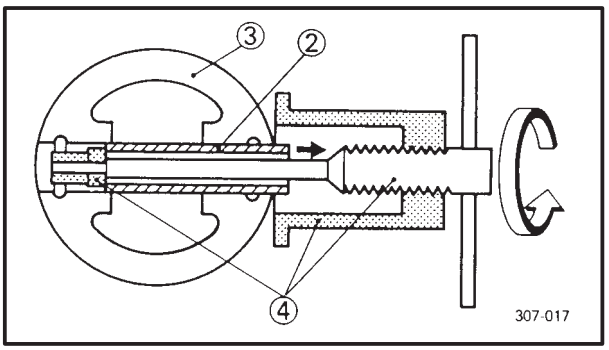

EAS00254

REMOVING THE CYLINDERS AND PISTONS

The following procedure applies to all of the cylinders and pistons.

1. Remove:
   - piston pin clip ①
   - piston pin ②
   - piston ③

CAUTION:

Do not use a hammer to drive the piston pin out.

NOTE:

- Before removing the piston pin clip, cover the crankcase opening with a clean rag to prevent the piston pin clip from falling into the crankcase.
- For reference during installation, put an identification mark on each piston crown.
- Before removing the piston pin, deburr the piston pin clip's groove and the piston's pin bore area. If both areas are deburred and the piston pin is still difficult to remove, remove it with the piston pin puller ④.

	Piston pin puller **90890-01304**

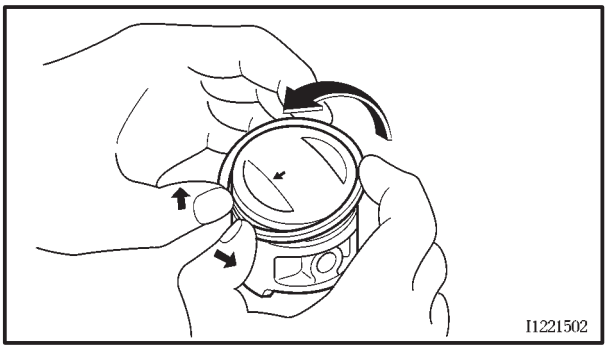

2. Remove:
   - top ring
   - 2nd ring
   - oil ring

NOTE:

When removing a piston ring, open the end gap with your fingers and lift the other side of the ring over the piston crown.

EAS00260

CHECKING THE CYLINDERS AND PISTONS

The following procedure applies to all of the cylinders and pistons.

1. Check:
   - piston wall
   - cylinder wall
     Vertical scratches → Replace the cylinder, and replace the piston and piston rings as a set.
2. Measure:
   - piston to cylinder clearance

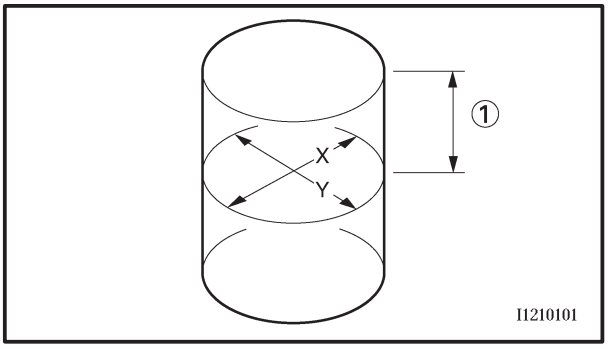

a. Measure cylinder bore “C” with the cylinder bore gauge.

① 20 mm from the top of the cylinder

NOTE:

Measure cylinder bore “C” by taking side-to-side and front-to-back measurements of the cylinder. Then, find the average of the measurements.

Cylinder bore gauge

Standard	**79.00 ~ 79.01 mm**
Wear limit	**79.1 mm**
Cylinder bore “C”	**“C” = X + Y/2**

b. If out of specification, replace the cylinder, and replace the piston and piston rings as a set.

c. Measure piston skirt diameter “P” with the micrometer.

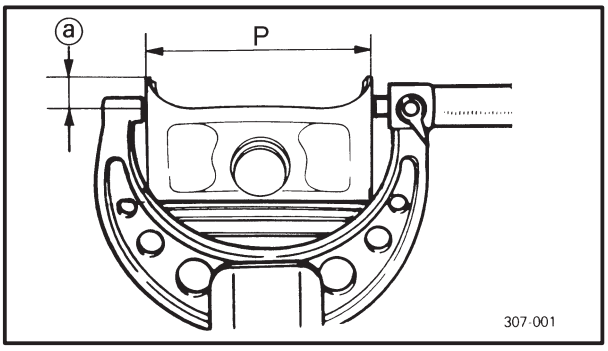

ⓐ 2.0 mm from the bottom edge of the piston.

	Piston size “P”
Standard	**78.970 ~ 78.985 mm**

d. If out of specification, replace the piston and piston rings as a set.

e. Calculate the piston to cylinder clearance with the following formula.

Piston to cylinder clearance =
Cylinder bore “C” –
Piston skirt diameter “P”

Piston-to-cylinder clearance
0.015 ~ 0.040 mm
<Limit> : 0.15 mm

f. If out of specification, replace the cylinder, and replace the piston and piston rings as a set.

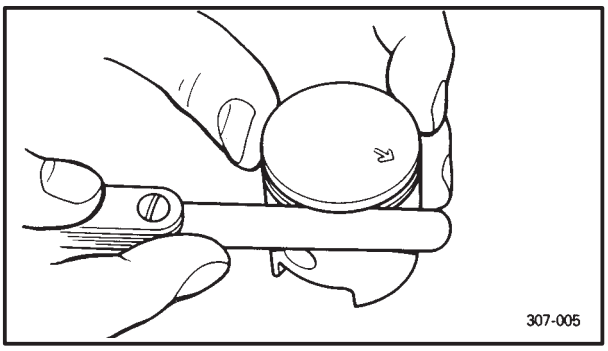

EAS00263

CHECKING THE PISTON RINGS

1. Measure:
   - piston ring side clearance
     Out of specification → Replace the piston and piston rings as a set.

NOTE:

Before measuring the piston ring side clearance, eliminate any carbon deposits from the piston ring grooves and piston rings.

Piston ring side clearance
Top ring
0.045 ~ 0.080 mm
<Limit>: 0.1 mm
2nd ring
0.03 ~ 0.07 mm
<Limit>: 0.1 mm

2. Install:
   - piston ring
     (into the cylinder)

NOTE:

Level the piston ring in the cylinder with the piston crown as shown.

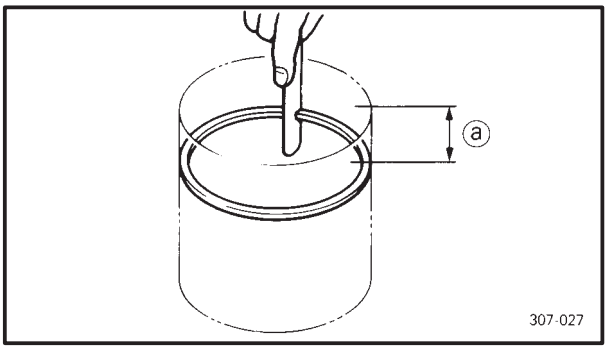

ⓐ 30 mm

3. Measure:
   - piston ring end gap
     Out of specification → Replace the piston ring.

NOTE:

The oil ring expander spacer's end gap cannot be measured. If the oil ring rail's gap is excessive, replace all three piston rings.

Piston ring end gap
Top ring
0.20 ~ 0.35 mm
<Limit>: 0.6 mm
2nd ring
0.35 ~ 0.50 mm
<Limit>: 0.75 mm
Oil ring
0.2 ~ 0.5 mm

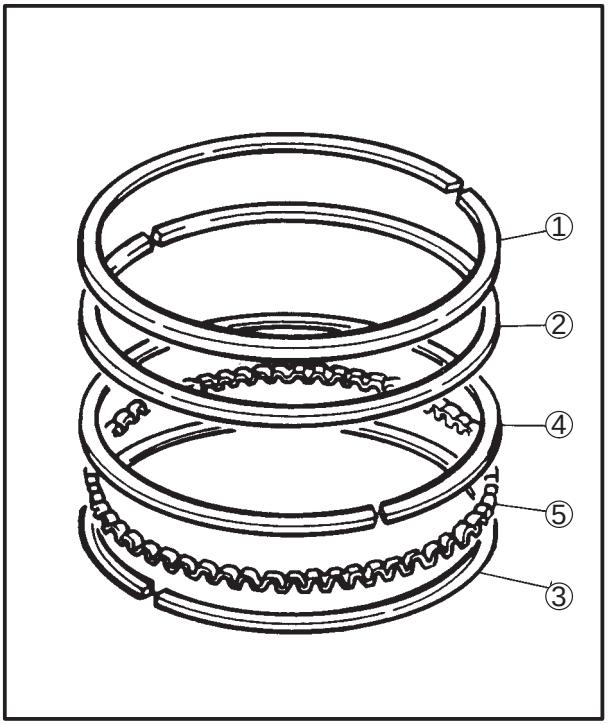

EAS00270

INSTALLING THE PISTONS AND CYLINDERS

The following procedure applies to all of the pistons and cylinders.

1. Install:
   - top ring ①
   - 2nd ring ②
   - lower oil ring rail ③
   - upper oil ring rail ④
   - oil ring expander ⑤

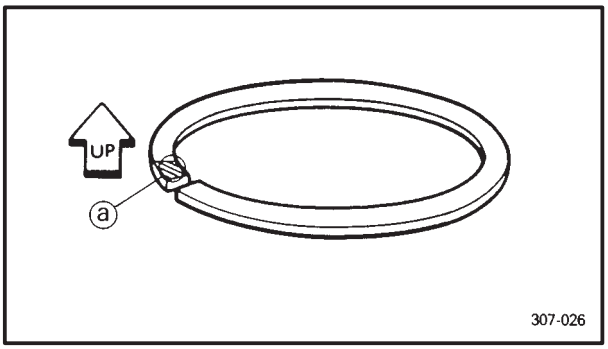

NOTE:

- Be sure to install the piston rings so that the manufacturer's marks or numbers ⓐ are located on the upper side of the rings.
- The piston rings that have an "R" mark must be installed into the 2nd ring groove.

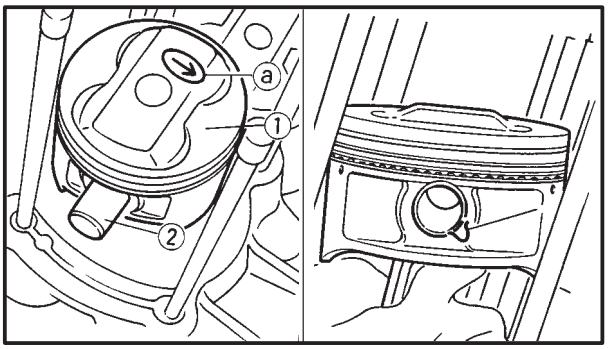

2. Install:
   - piston ①
   - piston pin ②
   - piston pin clip (New) ③

NOTE:

- Apply engine oil onto the piston pin.
- Make sure that the arrow mark ⓐ on the piston points towards the exhaust side of the engine.
- Before installing the piston pin clip, cover the crankcase opening with a clean rag to prevent the piston pin clip from falling into the crankcase.
- Reinstall each piston into its original cylinder (numbering order starting from the left: #1 to #4).

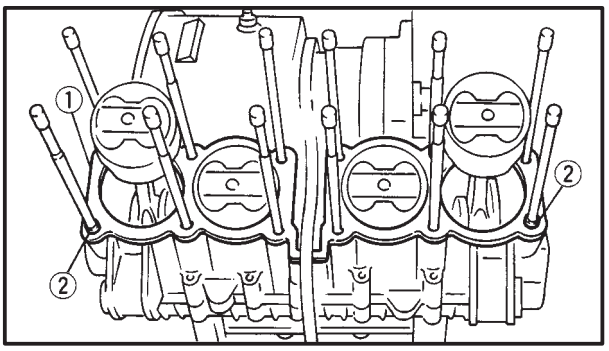

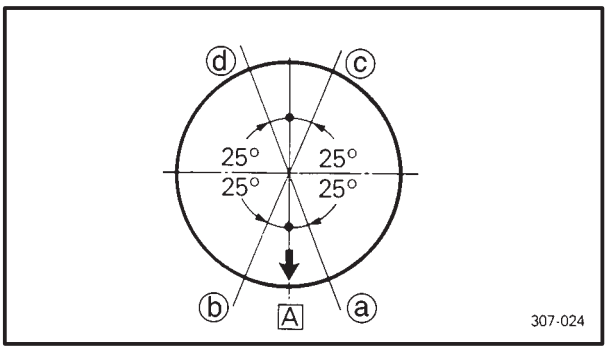

3. Install:
   - gasket (New) ①
   - dowel pins ②
4. Lubricate:
   - piston
   - piston rings
   - cylinder
     (with the recommended lubricant)

Recommended lubricant
Engine oil

5. Offset:
   - piston ring end gaps

ⓐ Top ring
ⓑ Lower oil ring rail
ⓒ Upper oil ring rail
ⓓ 2nd ring
A forward

6. Install:
   - cylinder block

NOTE:

- Install pistons #2 and #3 before installing pistons #1 and #4.
- Pass the timing chain and timing chain guide (intake side) through the timing chain cavity.

EAS00273

CLUTCH

CLUTCH COVER

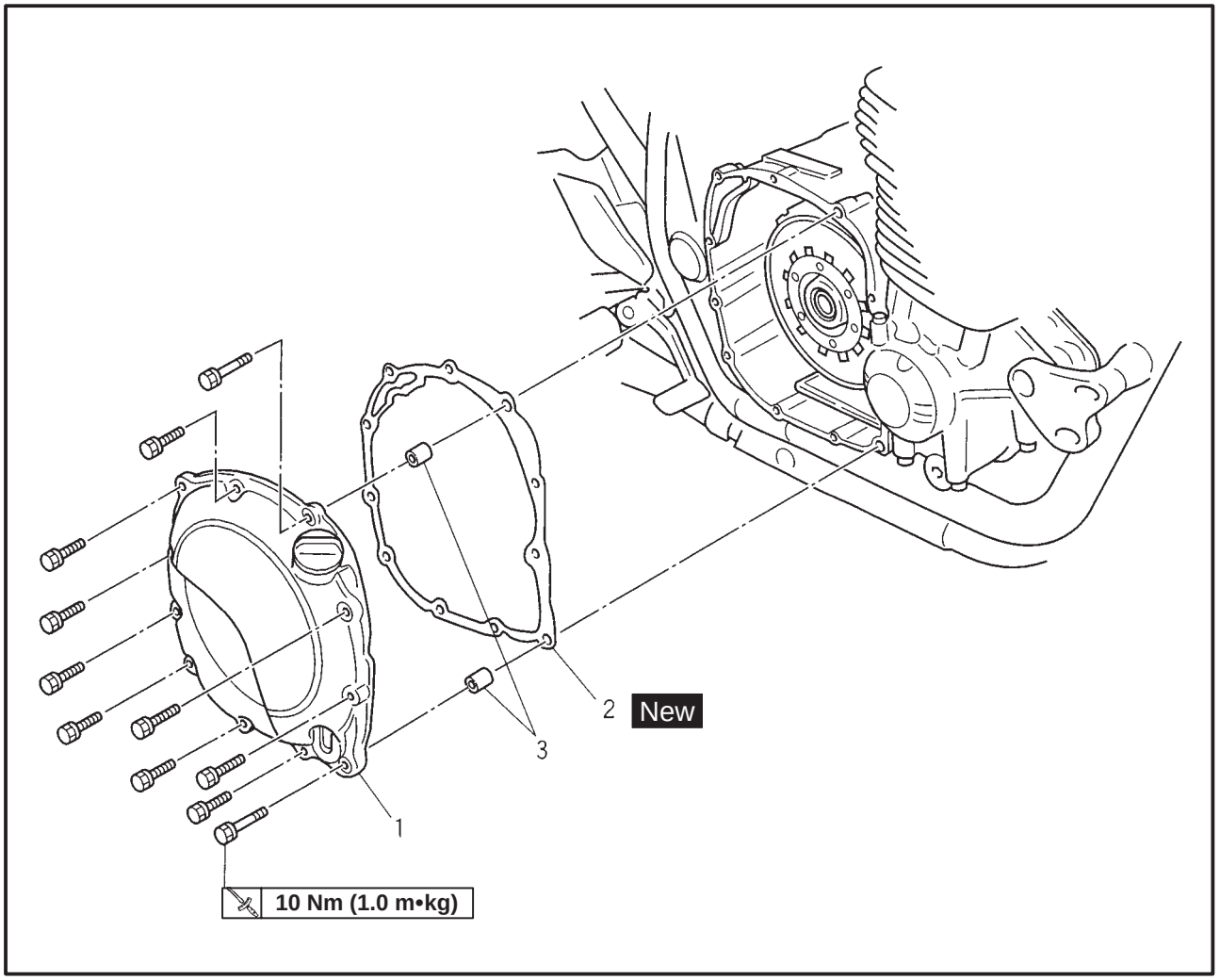

Order	Job/Part	Q'ty	Remarks
	Removing the clutch cover.		Remove the parts in the order listed.
	Engine oil		Drain
1	Clutch cover	1	
2	Gasket	1	
3	Dowel pins	2	
			For installation, reverse the removal procedure.

EAS00274

CLUTCH

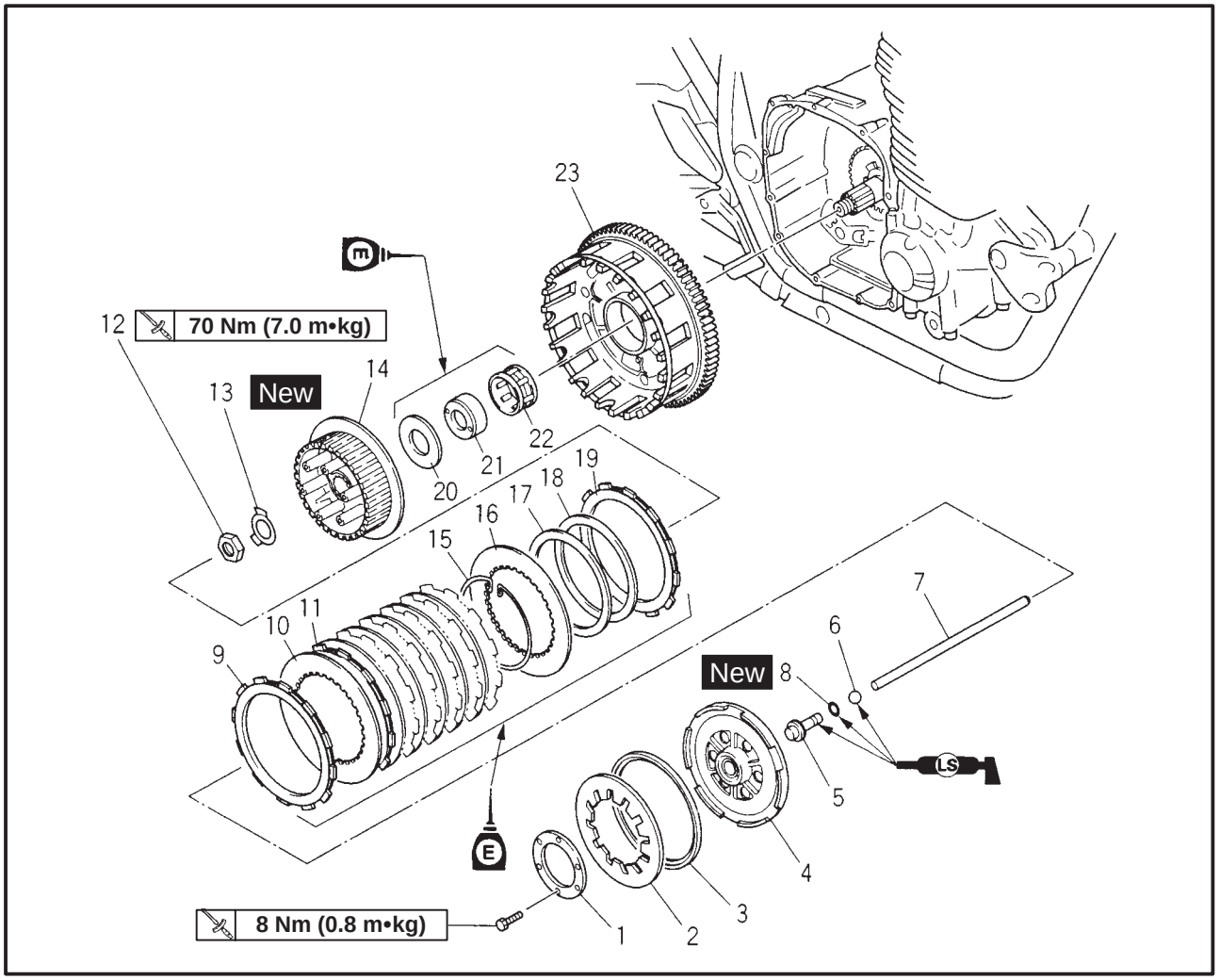

Order	Job/Part	Q'ty	Remarks
	Removing the clutch		Remove the parts in the order listed.
1	Pressure plate	1	
2	Clutch spring	1	
3	Spring housing	1	
4	Pressure plate	1	
5	Clutch push rod (short)	1	
6	Ball	1	Refer to "INSTALLING THE CLUTCH".
7	Clutch push rod (long)	1	
8	O-ring	1	
9	Friction plates	1	
10	Clutch plates	6	
11	Friction plates	6	
12	Clutch boss nut	1	Refer to "REMOVING/INSTALLING THE CLUTCH".
13	Lock washer	1	

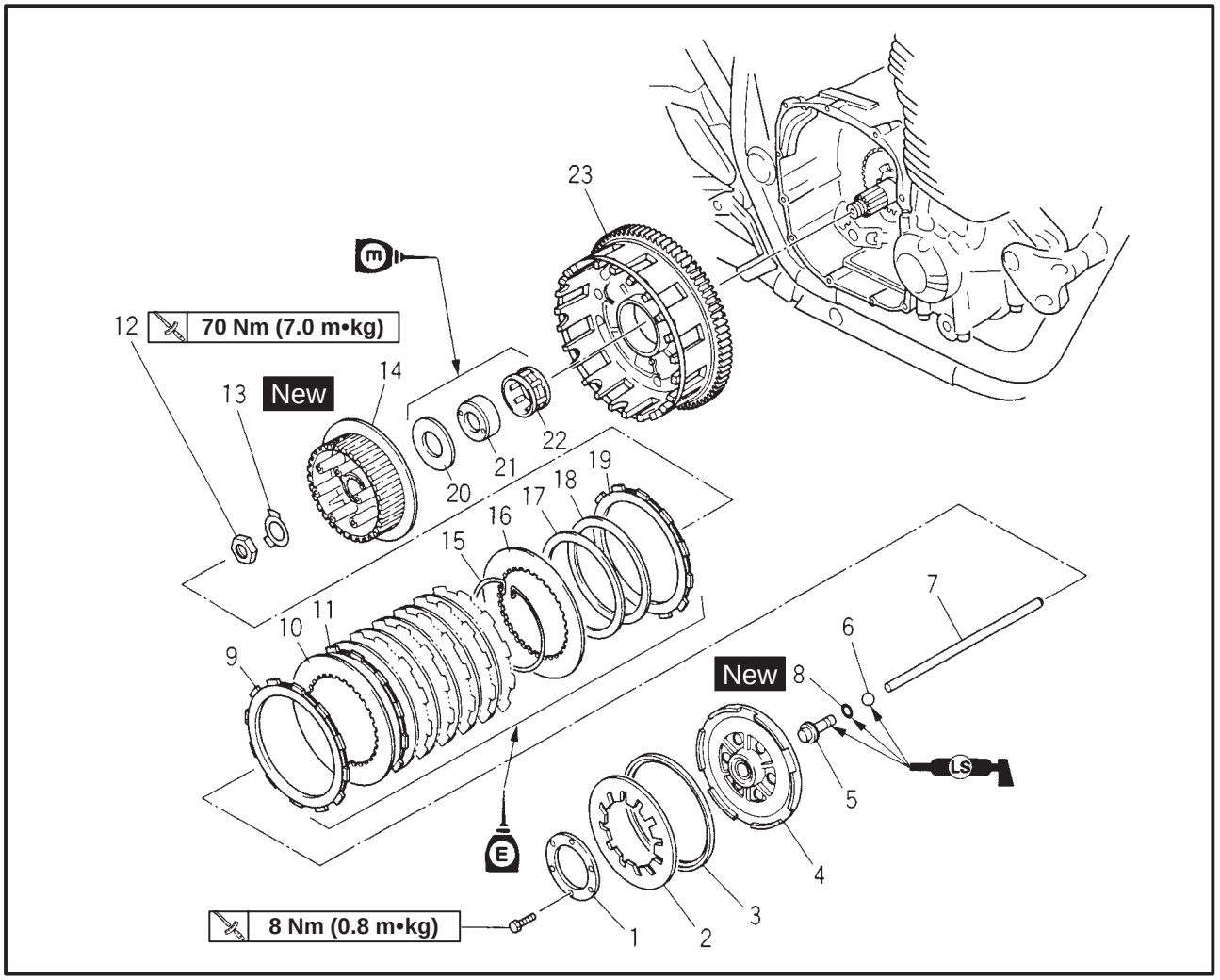

Order	Job/Part	Q'ty	Remarks
14	Clutch boss	1	
15	Stopper ring	1	Refer to "REMOVING/INSTALLING THE CLUTCH".
16	Clutch plate	1	
17	Clutch spring plate	1	
18	Clutch spring plate seat	1	
19	Friction plates (narrow)	1	
20	Thrust washer	1	
21	Spacer	1	
22	Bearing	1	
23	Clutch housing	1	
			For installation, reverse the removal procedure.

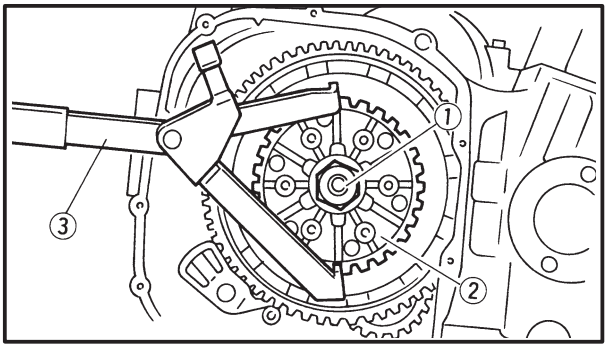

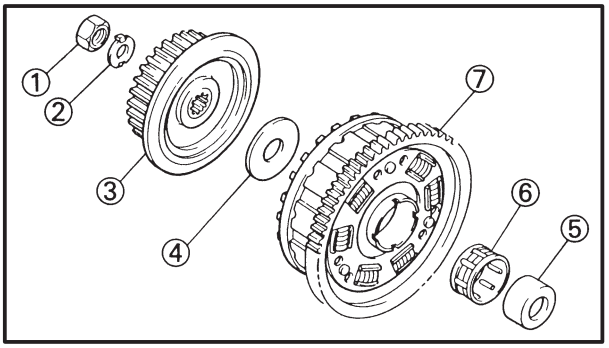

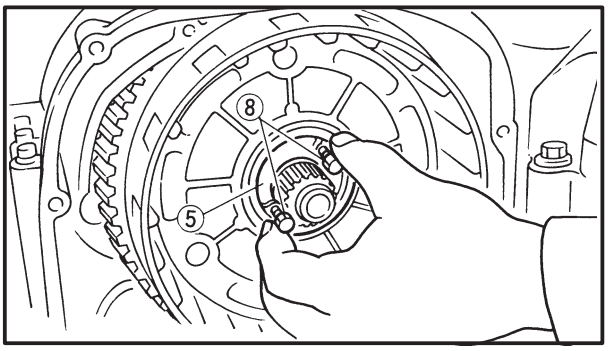

EAS00275

REMOVING THE CLUTCH

1. Straighten the lock washer tab.
2. Loosen:
   - clutch boss nut ①

NOTE:

While holding the clutch boss ② with the universal clutch holder, loosen the clutch boss nut.

Universal clutch holder ③
90890-04086

3. Remove:
   - clutch boss nut ①
   - lock washer ②
   - clutch boss ③
   - thrust washer ④
   - spacer ⑤
   - bearing ⑥
   - clutch housing ⑦

NOTE:

Insert two 6 mm bolts ⑧ into the spacer and then remove the spacer by pulling on the bolts.

EAS00280

CHECKING THE FRICTION PLATES

The following procedure applies to all of the friction plates.

1. Check:
   - friction plate
     Damage/wear → Replace the friction plates as a set.
2. Measure:
   - friction plate thickness
     Out of specification → Replace the friction plates as a set.

NOTE:

Measure the friction plate at four places.

Friction plate thickness
2.9 ~ 3.1 mm
<Limit>: 2.8 mm

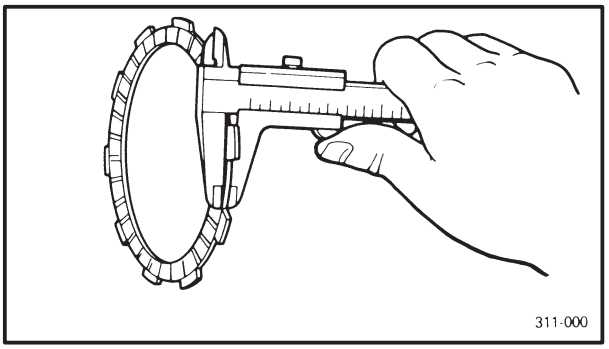

EAS00281

CHECKING THE CLUTCH PLATES

The following procedure applies to all of the clutch plates.

1. Check:
   - clutch plate
     Damage → Replace the clutch plates as a set.
2. Measure:
   - clutch plate warpage
     (with a surface plate and thickness gauge ①)
     Out of specification → Replace the clutch plates as a set.

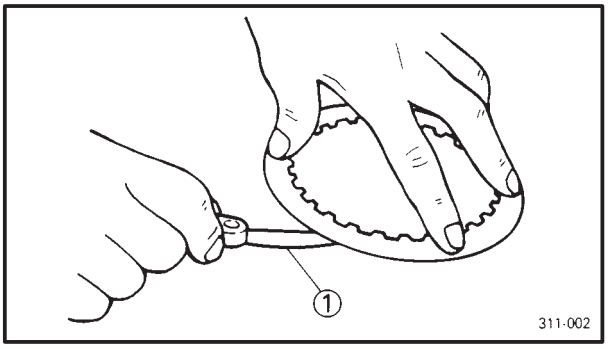

Clutch plate warpage limit
Less than 0.1 mm

CHECKING THE CLUTCH SPRING

1. Check:
   - Clutch spring
     Damage → Replace as a set.

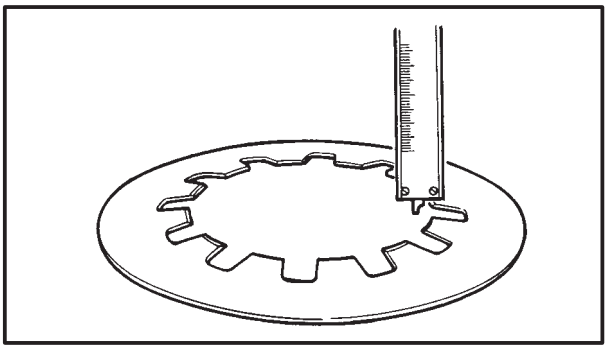

2. Measure:
   - Clutch spring free height
     Out of specification → Replace spring as a set.

Free height limit (clutch spring):
6.0 mm

EAS00283

CHECKING THE CLUTCH SPRING PLATE

1. Check:
   - clutch spring plate
     Damage → Replace.
2. Check:
   - clutch spring plate seat
     Damage → Replace.

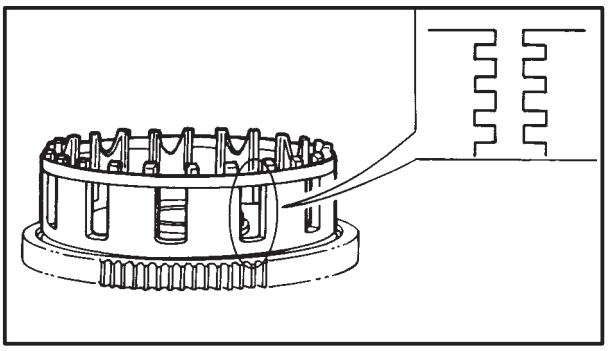

EAS00284

CHECKING THE CLUTCH HOUSING

1. Check:
   - Clutch housing dogs
     Damage/pitting/wear → Deburr the clutch housing dogs or replace the clutch housing.

NOTE:

Pitting on the clutch housing dogs will cause erratic clutch operation.

2. Check:
   - bearing
     Damage/wear → Replace the clutch housing.

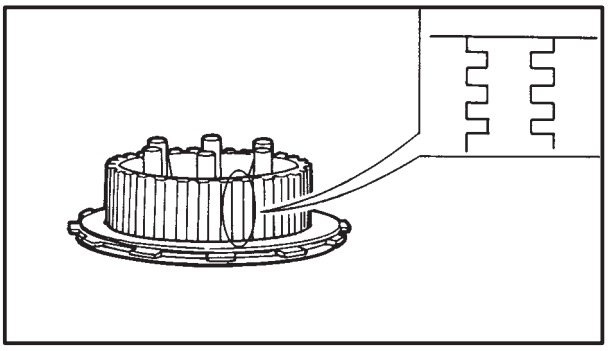

EAS00285

CHECKING THE CLUTCH BOSS

1. Check:
   - clutch boss splines
     Damage/pitting/wear → Replace the clutch boss.

NOTE:

Pitting on the clutch boss splines will cause erratic clutch operation.

EAS00286

CHECKING THE PRESSURE PLATE

1. Check:
   - pressure plate
     Cracks/damage → Replace.

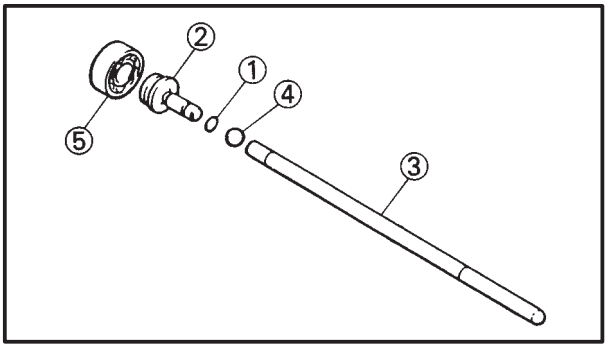

EAS00288

CHECKING THE CLUTCH PUSH RODS

1. Check:
   - O-ring ①
   - short clutch push rod ②
   - long clutch push rod ③
   - ball ④
   - bearing ⑤

   Cracks/damage/wear → Replace the defective part(-s).
2. Measure:
   - long clutch push rod bending limit

   Out of specification → Replace the long clutch push rod.

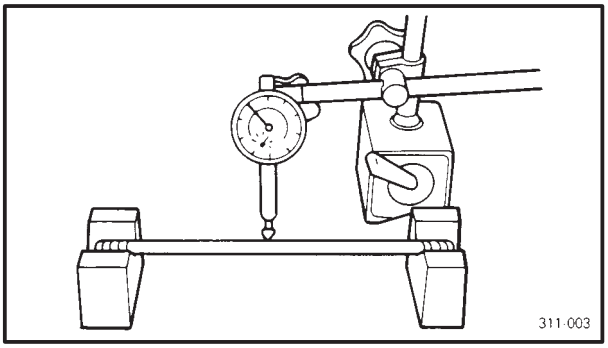

Long clutch push rod bending limit
0.3 mm

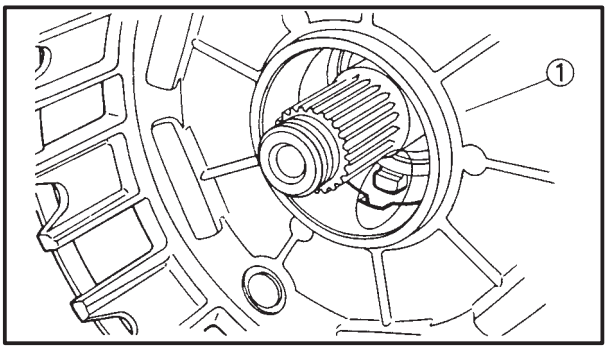

INSTALLING THE CLUTCH

1. Install:
   - clutch housing ①

NOTE:

Engage the notch of clutch housing and the projection on the oil pump drive gear.

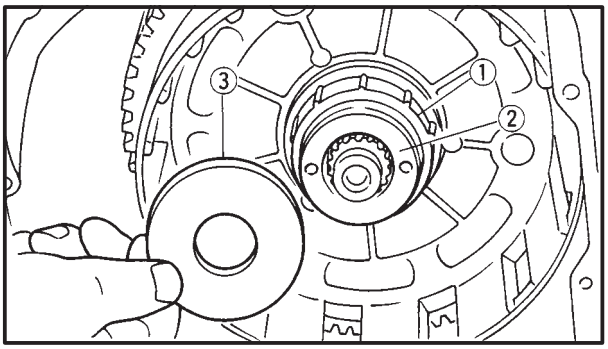

2. Install:
   - bearing ①
   - spacer ②
   - thrust washer ③

NOTE:

Install the spacer with the two screw holes facing towards the clutch boss.

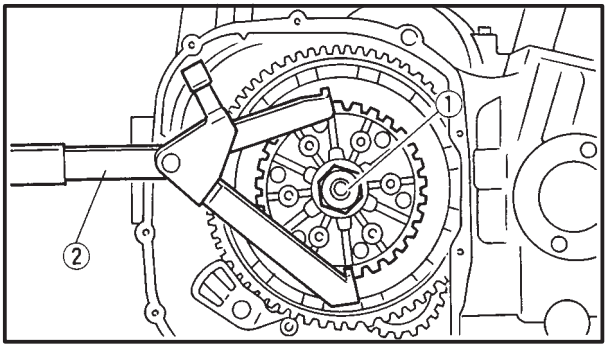

3. Tighten:
   - clutch boss nut ①

NOTE:

While holding the clutch boss with the universal clutch holder ②, tighten the clutch boss nut.

	Universal clutch holder **90890-04086**

	Clutch boss nut **70 Nm (7.0 m•kg)**

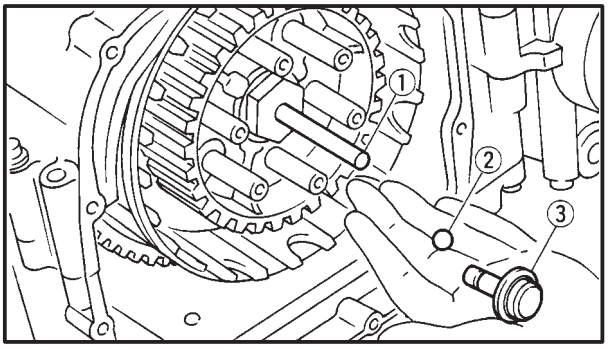

4. Bend the lock washer tab along a flat side of the nut.
5. Lubricate:
   - long clutch push rod ①
   - ball ②
   - short clutch push rod ③
   (with the recommended lubricant)

	Recommended lubricant **Lithium soap base grease**

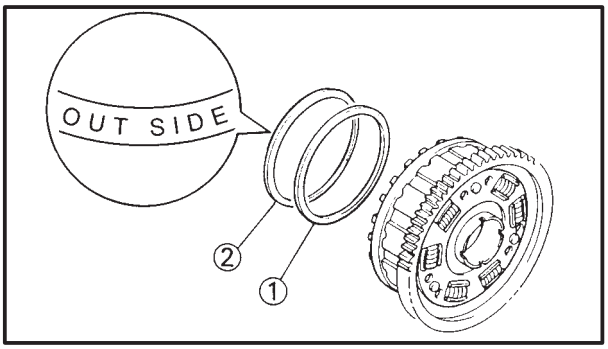

6. Install:
   - clutch spring plate seat ①
   - clutch spring plate ②

NOTE:

Install the spring plate with the letters “OUT SIDE” facing outward.

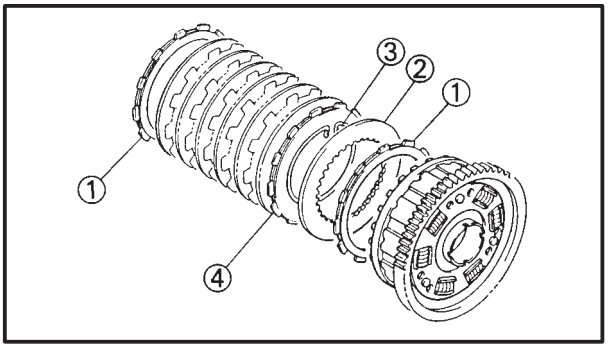

7. Install:
   - Friction plates (narrow type) ①
   - Clutch plates ②
   - Stopper ring ③
   - Friction plates (wide type) ④

▼▼▼▼▼▼▼▼▼▼▼▼▼▼▼▼▼▼▼▼▼▼▼▼▼▼▼▼▼▼▼▼

a. Install the friction plate of narrow contact face ① and one of the clutch plate to the clutch boss.
b. Install the stopper ring ③.

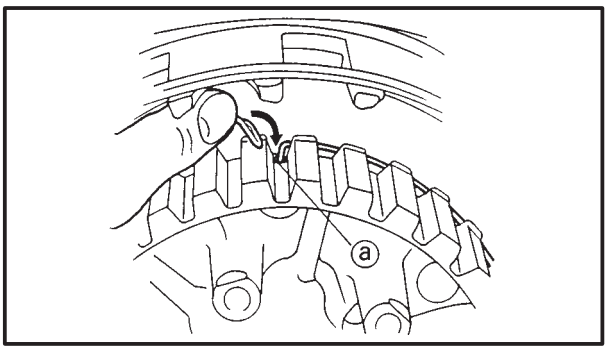

NOTE:

Install the stopper ring onto the groove around the clutch boss with both ends of the ring fitted in the hole ⓐ on the boss.

c. Install the other 6 clutch plates and the 6 friction plates of wide contact face alternately.
d. Install the another friction plate of narrow face.

▲▲▲▲▲▲▲▲▲▲▲▲▲▲▲▲▲▲▲▲▲▲▲▲▲▲▲▲▲▲▲▲

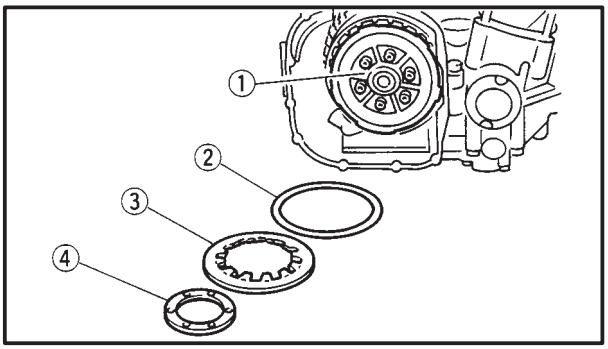

8. Install:
   - Pressure plate ①
   - Spring housing ②
   - Clutch spring ③
   - Plate ④
   - Bolts (clutch spring)

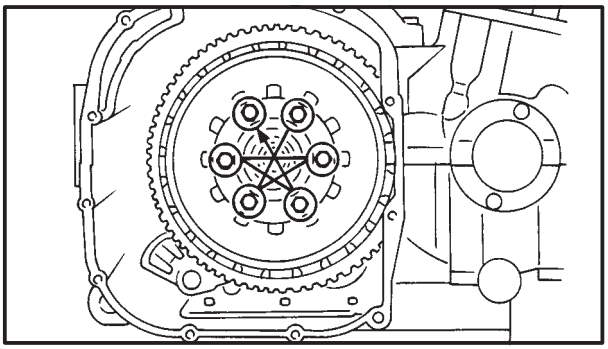

NOTE:

Tighten the bolts (clutch spring) in stages, using a crisscross pattern.

	Bolt (clutch spring): **8 Nm (0.8 m•kg)**

EAS00305

CLUTCH MASTER CYLINDER

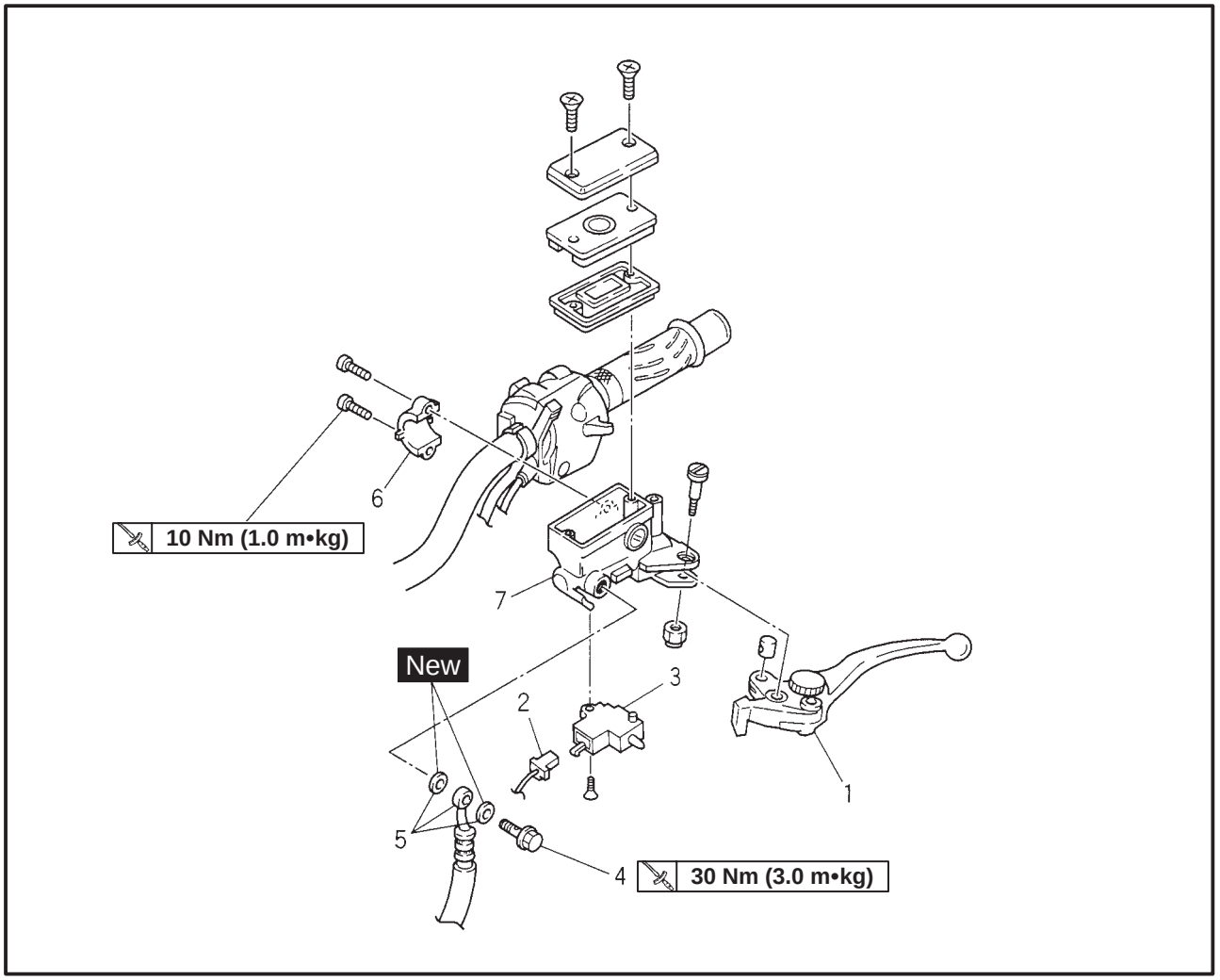

Order	Job/Part	Q'ty	Remarks
	Removing the clutch master cylinder		Remove the parts in the order listed.
1	Clutch lever	1	**NOTE:**
2	Clutch switch lead	1	Before removing the clutch master cylinder, drain the clutch fluid from the entire clutch system.
3	Clutch switch	1	
4	Union bolt	1	Refer to "INSTALLING THE CLUTCH MASTER CYLINDER".
5	Copper washers/Clutch hose	2/1	
6	Clutch lever holder	1	
7	Clutch master cylinder	1	
			For installation, reverse the removal procedure.

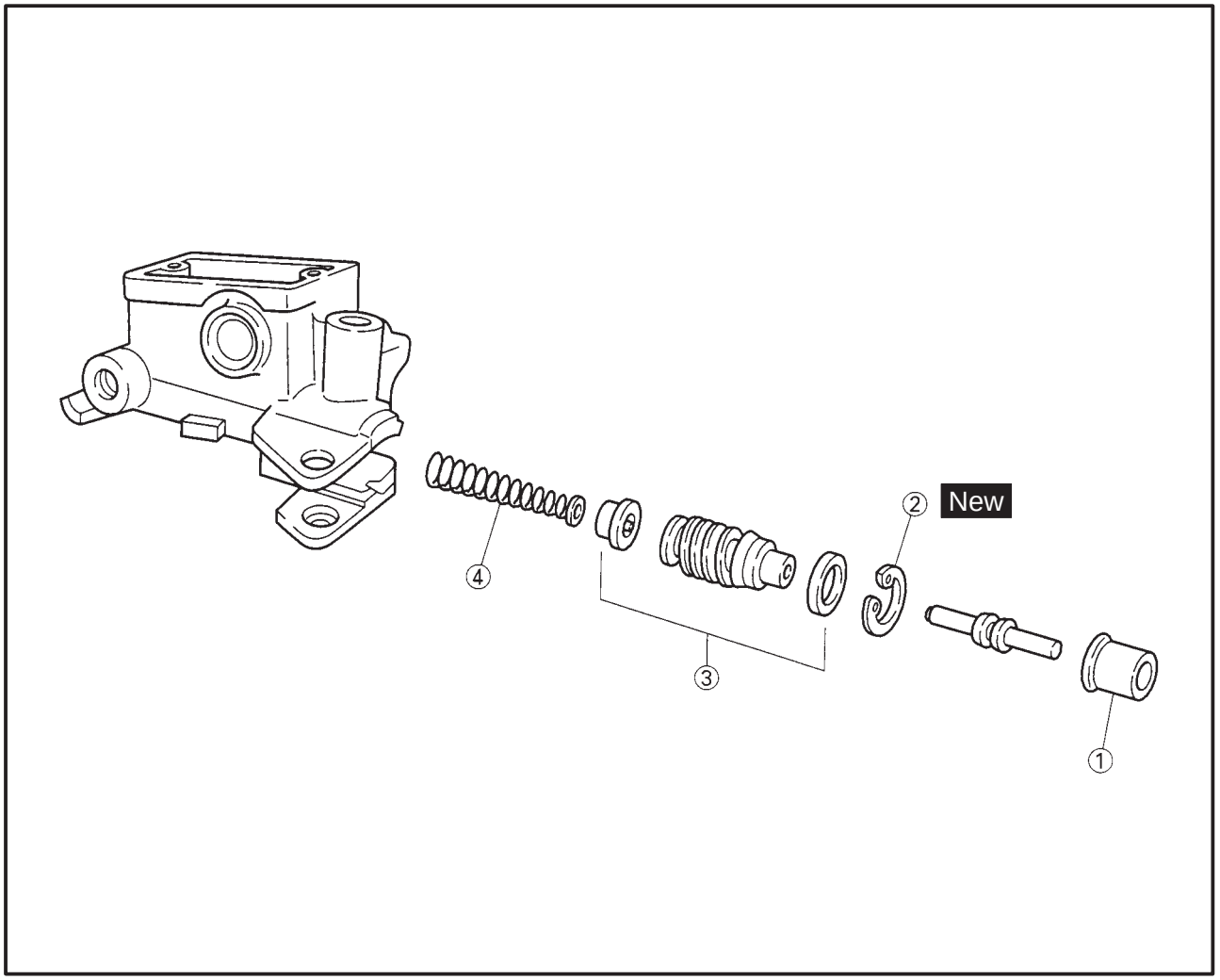

Order	Job/Part	Q'ty	Remarks
	Disassembling the clutch master cylinder		Disassembly the parts in the order listed.
①	Master cylinder boot	1	
②	Circlip	1	
③	Master cylinder kit	1	
④	Spring	1	
			For assembly, reverse the disassembly procedure.

EAS00307

CAUTION:

Clutch components rarely require disassembly.
Therefore, always follow these preventive measures:
- **Never disassemble clutch components unless absolutely necessary.**
- **If any connection on the hydraulic clutch system is disconnected, the entire clutch system must be disassembled, drained, cleaned, properly filled, and bled after reassembly.**
- **Never use solvents on internal clutch components.**
- **Use only clean or new clutch fluid for cleaning clutch components.**
- **Clutch fluid may damage painted surfaces and plastic parts. Therefore, always clean up any spilt fluid immediately.**
- **Avoid clutch fluid coming into contact with the eyes as it can cause serious injury.**

First aid for clutch fluid entering the eyes:
- **Flush with water for 15 minutes and get immediate medical attention.**

EAS00308

CHECKING THE CLUTCH MASTER CYLINDER

Recommended clutch component replacement schedule	
Piston seals	**Every two years**
Clutch hose	**Every two years**
Clutch fluid	**Every two years and whenever the clutch is disassembled.**

1. Check:
   - clutch master cylinder body ①
     Cracks/damage → Replace the clutch master cylinder.
   - clutch fluid delivery passage ②
     (clutch master cylinder body)
     Obstruction → Blow out with compressed air.

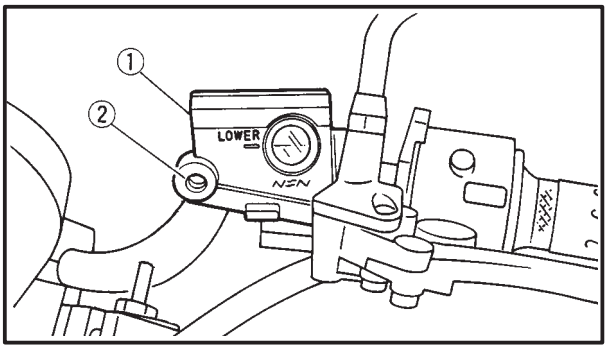

⚠ WARNING

Whenever a clutch master cylinder is disassembled, replace the piston seals.

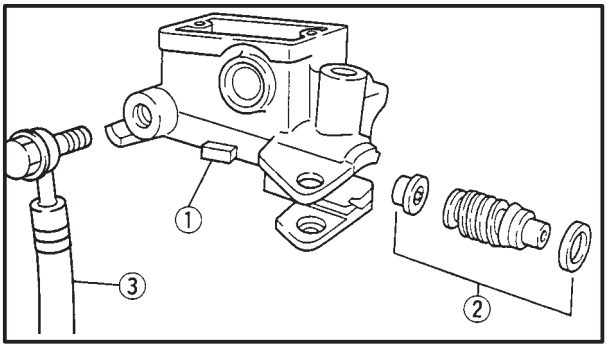

2. Check:
   - clutch master cylinder ①
   - clutch master cylinder kit ②
     Rust/scratches/wear → Replace the clutch master cylinder and clutch master cylinder kit as a set.
   - clutch hose ③
     Cracks/damage/wear → Replace.

EAS00309

ASSEMBLING THE CLUTCH MASTER CYLINDER

WARNING

- **Before installation, all internal clutch components must be cleaned and lubricated with clean or new clutch fluid.**
- **Never use solvents on internal clutch components as they will cause the piston seals to swell and distort.**
- **Whenever a clutch master cylinder is disassembled, replace the piston seals.**

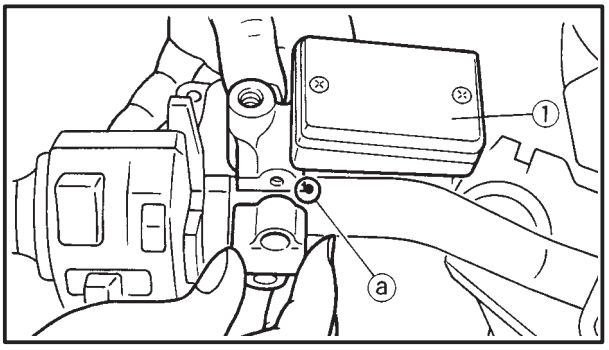

Recommended clutch fluid
Brake fluid DOT 4

EAS00310

INSTALLING THE CLUTCH MASTER CYLINDER

1. Install:
   - clutch master cylinder ①

WARNING

- **Install the clutch lever holder with the "UP" mark facing up.**
- **Align the end of the clutch lever holder with the punch mark ⓐ in the handlebar.**
- **First, tighten the upper bolt, then the lower bolt.**

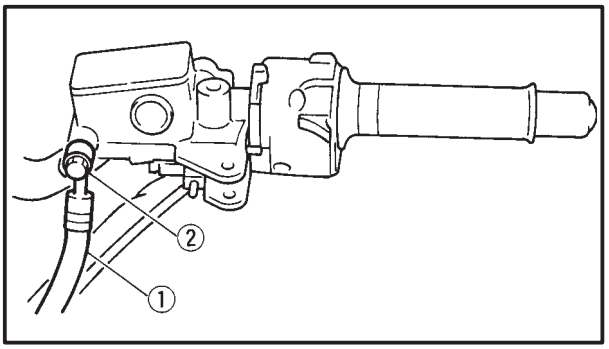

2. Install:
   - copper washers (New)
   - clutch hose ①
   - union bolt ②

WARNING

Proper clutch hose routing is essential to insure safe motorcycle operation. Refer to "CABLE ROUTING".

NOTE:

While holding the clutch hose, tighten the union bolt.

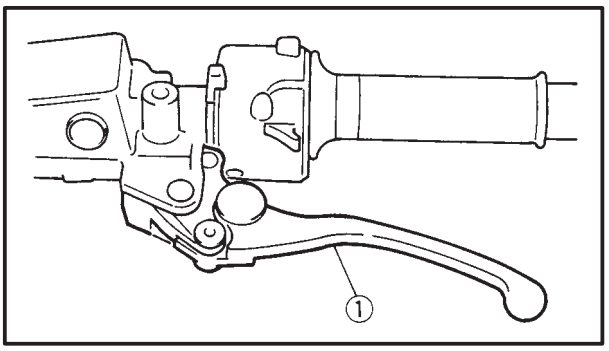

Union bolt
30 Nm (3.0 m•kg)

3. Install:
   - clutch lever ①

NOTE:

Lubricate the clutch lever pivot bolt with lithium soap base grease.

4. Fill:
   - clutch master cylinder reservoir
     (with the specified amount of the recommended clutch fluid)

Recommended clutch fluid
Brake fluid DOT 4

WARNING

- **Use only the designated clutch fluid. Other clutch fluids may cause the rubber seals to deteriorate, causing leakage and poor clutch performance.**
- **Refill with the same type of clutch fluid that is already in the system. Mixing clutch fluids may result in a harmful chemical reaction, leading to poor clutch performance.**
- **When refilling, be careful that water does not enter the reservoir. Water will significantly lower the boiling point of the clutch fluid and could cause vapor lock.**

CAUTION:

Clutch fluid may damage painted surfaces or plastic parts. Therefore, always clean up any spilt clutch fluid immediately.

NOTE:

In order to ensure a correct reading of the clutch fluid level, make sure that the top of the reservoir is horizontal.

5. Bleed:
   - clutch system
     Refer to “BLEEDING THE HYDRAULIC CLUTCH SYSTEM” in chapter 3.

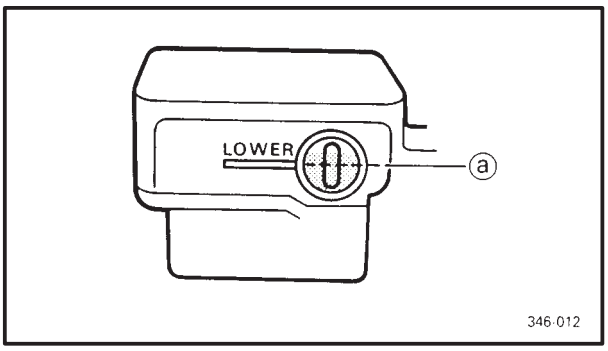

6. Check:
   - clutch fluid level
     Below the minimum level mark ⓐ → Add the recommended clutch fluid to the proper level.
     Refer to “CHECKING THE CLUTCH FLUID LEVEL” in chapter 3.
7. Check:
   - clutch lever operation
     Soft or spongy feeling → Bleed the clutch system.
     Refer to “BLEEDING THE HYDRAULIC CLUTCH SYSTEM” in chapter 3.

EAS00311

CLUTCH RELEASE CYLINDER

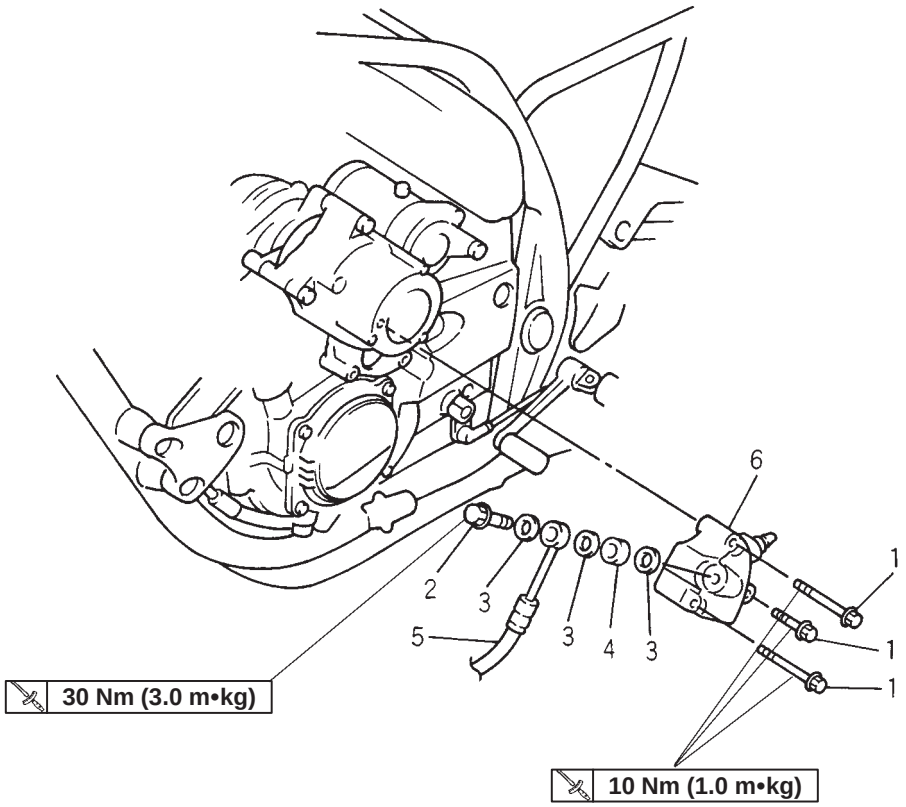

Order	Job/Part	Q'ty	Remarks
	Removing the clutch release cylinder		Remove the parts in the order listed. Refer to "INSTALLING THE CLUTCH RELEASE CYLINDER".
1	Bolt	3	**NOTE:** Before removing the clutch releace cylinder, drain the clutch fluid from the entire clutch system.
2	Union bolt	1	Refer to "INSTALLING THE CLUTCH RELEASE CYLINDER".
3	Copper washer	3	
4	Spacer	1	
5	Clutch hose	1	
6	Clutch release cylinder	1	
			For installation, reverse the removal procedure.

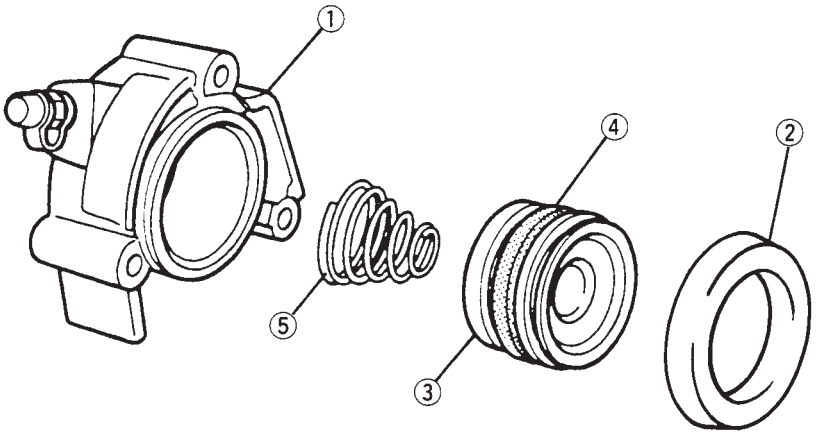

Order	Job/Part	Q'ty	Remarks
	Disassembling the clutch release cylinder		Disassembly the parts in the order listed.
①	Clutch release cylinder	1	Refer to "DISASSEMBLING THE CLUTCH RELEASE CYLINDER".
②	Piston seal	1	
③	Clutch release cylinder piston	1	
④	Piston seal	1	
⑤	Spring	1	
			For assembly, reverse the disassembly procedure.

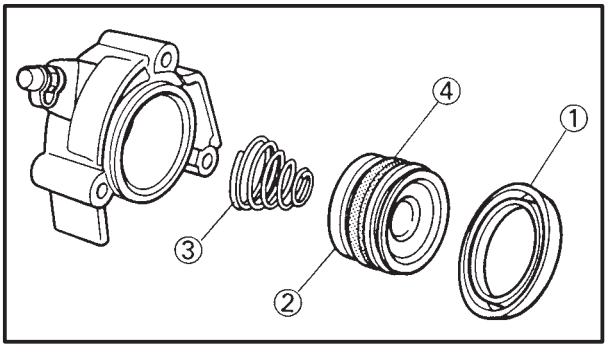

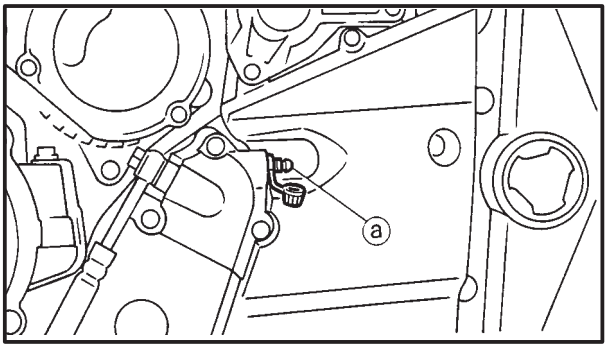

EAS00313

DISASSEMBLING THE CLUTCH RELEASE CYLINDER

1. Remove:
   - piston seal ①
   - clutch release cylinder piston ②
   - spring ③
   - piston seal ④

▼▼▼▼▼▼▼▼▼▼▼▼▼▼▼▼▼▼▼▼▼▼▼▼▼▼▼▼▼▼▼▼▼▼

a. Blow compressed air into the clutch hose joint opening ⓐ to force out the piston from the clutch release cylinder.

⚠ WARNING

- **Cover the clutch release cylinder with a rag. Be careful not to get injured when the piston is expelled from the clutch release cylinder.**
- **Never try to pry out the clutch release cylinder piston.**

b. Remove the clutch release cylinder piston seals.

▲▲▲▲▲▲▲▲▲▲▲▲▲▲▲▲▲▲▲▲▲▲▲▲▲▲▲▲▲▲▲▲▲▲

EAS00314

CHECKING THE CLUTCH RELEASE CYLINDER

Recommended clutch component replacement schedule	
Piston seals	**Every two years**
Clutch hose	**Every two years**
Clutch fluid	**Every two years and whenever the clutch is disassembled**

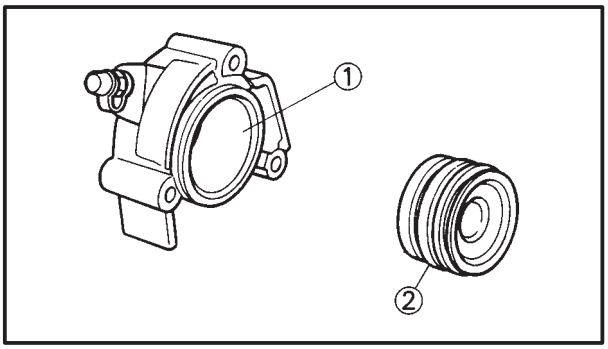

1. Check:
   - clutch release cylinder body
     Cracks/damage → Replace the clutch release cylinder.
2. Check:
   - clutch release cylinder ①
   - clutch release cylinder piston ②
     Rust/scratches/wear → Replace the clutch release cylinder and clutch release cylinder piston as a set.

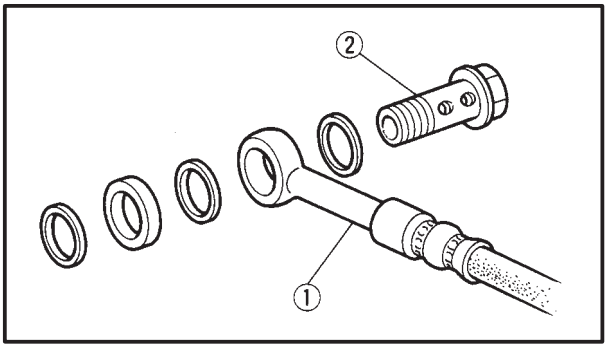

EAS00315

INSTALLING THE CLUTCH RELEASE CYLINDER

1. Check:
   - copper washers (New)
   - clutch hose ①
   - union bolt ②

WARNING

Proper clutch hose routing is essential to insure safe motorcycle operation. Refer to "CABLE ROUTING".

	Union bolt **30 Nm (3.0 m•kg)**

2. Fill:
   - clutch master cylinder reservoir
     (with the specified amount of the recommended clutch fluid)

	Recommended clutch fluid **Brake fluid DOT 4**

WARNING

- **Use only the designated clutch fluid. Other clutch fluids may cause the rubber seals to deteriorate, causing leakage and poor clutch performance.**
- **Refill with the same type of clutch fluid that is already in the system. Mixing clutch fluids may result in a harmful chemical reaction, leading to poor clutch performance.**
- **When refilling, be careful that water does not enter the reservoir. Water will significantly lower the boiling point of the clutch fluid and could cause vapor lock.**

CAUTION:

Clutch fluid may damage painted surfaces or plastic parts. Therefore, always clean up any spilt clutch fluid immediately.

NOTE:

In order to ensure a correct reading of the clutch fluid level, make sure that the top of the reservoir is horizontal.

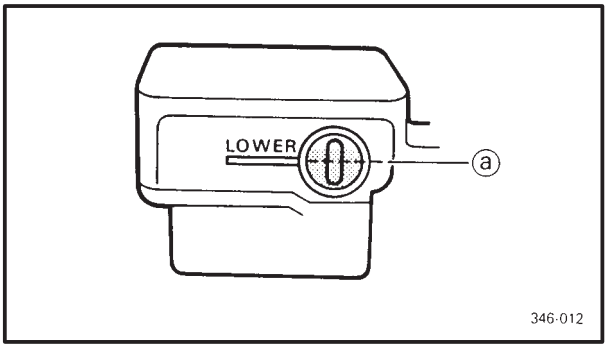

3. Bleed:
   - clutch system
     Refer to “BLEEDING THE HYDRAULIC CLUTCH SYSTEM” in chapter 3.
4. Check:
   - clutch fluid level
     Below the minimum level mark ⓐ → Add the recommended clutch fluid to the proper level.
     Refer to “CHECKING THE CLUTCH FLUID LEVEL” in chapter 3.
5. Check:
   - clutch lever operation
     Soft or spongy feeling → Bleed the clutch system.
     Refer to “BLEEDING THE HYDRAULIC CLUTCH SYSTEM” in chapter 3.

OIL PUMP

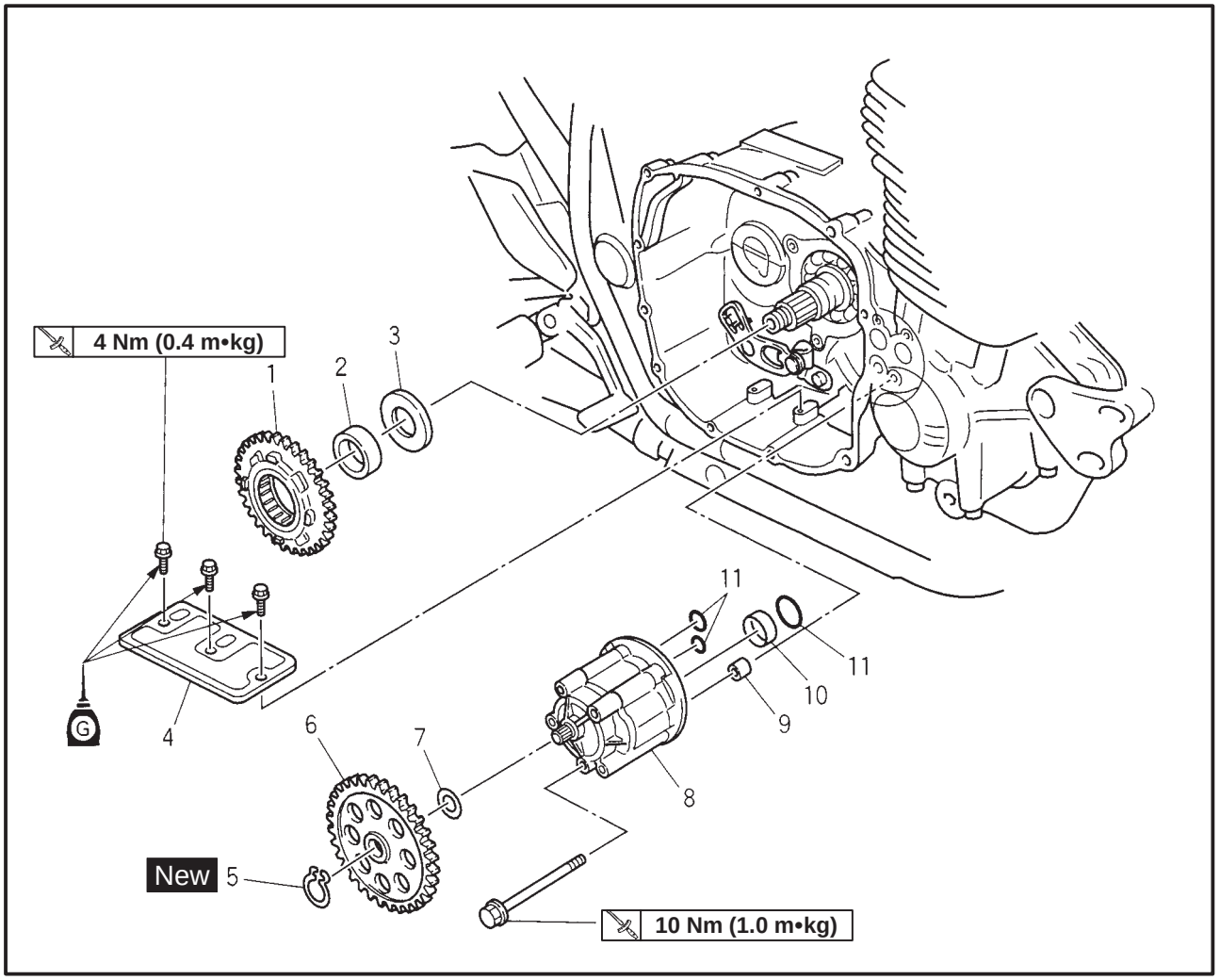

Order	Job/Part	Q'ty	Remarks
	Removing the oil pump.		Remove the parts in the order listed.
	Clutch		Refer to "INSTALLING THE CLUTCH".
1	Oil pump drive gear	1	
2	Collar	1	
3	Washer	1	
4	Oil buffer plate	1	
5	Circlip	1	
6	Oil pump driven gear	1	
7	Washer	1	
8	Oil pump	1	Refer to "INSTALLING THE OIL PUMP".
9	Dowel pin	1	
10	Collar	1	
11	O-ring	3	
			For installation, reverse the removal procedure.

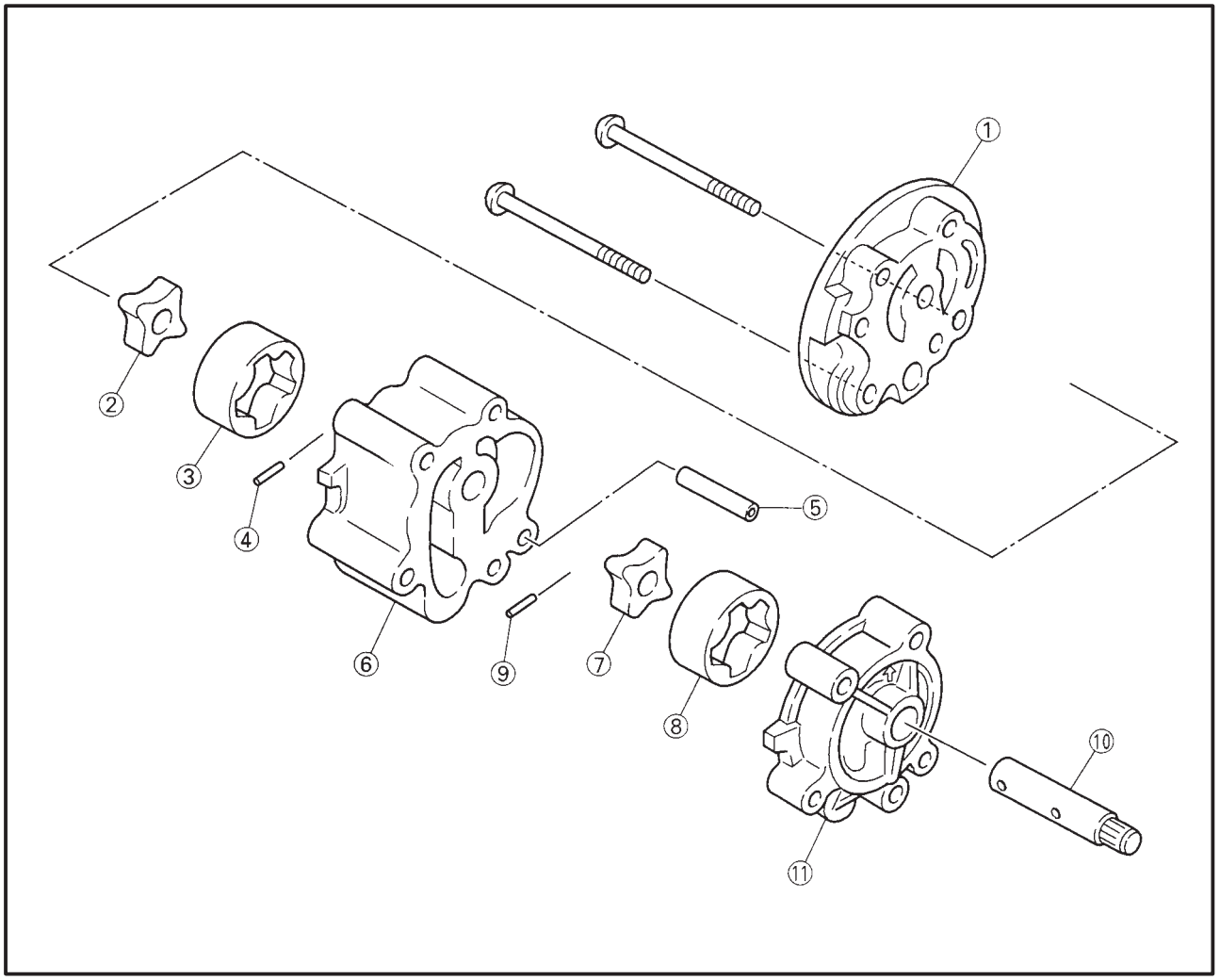

Order	Job/Part	Q'ty	Remarks
	Disassembling the oil pump		Disassembly the parts in the order listed.
①	Oil pump housing	1	Refer to "ASSEMBLING THE OIL PUMP".
②	Inner rotor	1	
③	Outer rotor	1	
④	Pin	1	
⑤	Dowel pin	1	
⑥	Oil pump housing	1	
⑦	Inner rotor	1	
⑧	Outer rotor	1	
⑨	Pin	1	
⑩	Oil pump shaft	1	
⑪	Oil pump cover	1	
			For assembly, reverse the disassembly procedure.

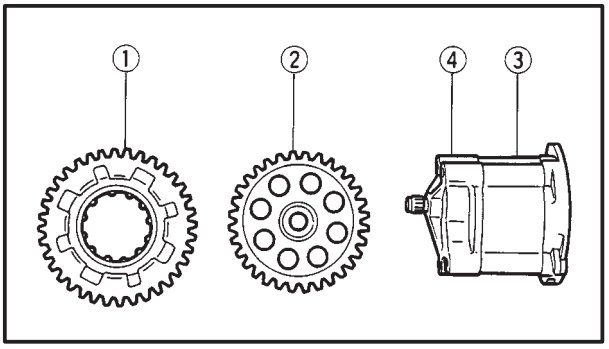

EAS00364

CHECKING THE OIL PUMP

1. Check:
   - oil pump drive gear ①
   - oil pump driven gear ②
   - oil pump housing ③
   - oil pump housing cover ④

   Cracks/damage/wear → Replace the defective part(-s).

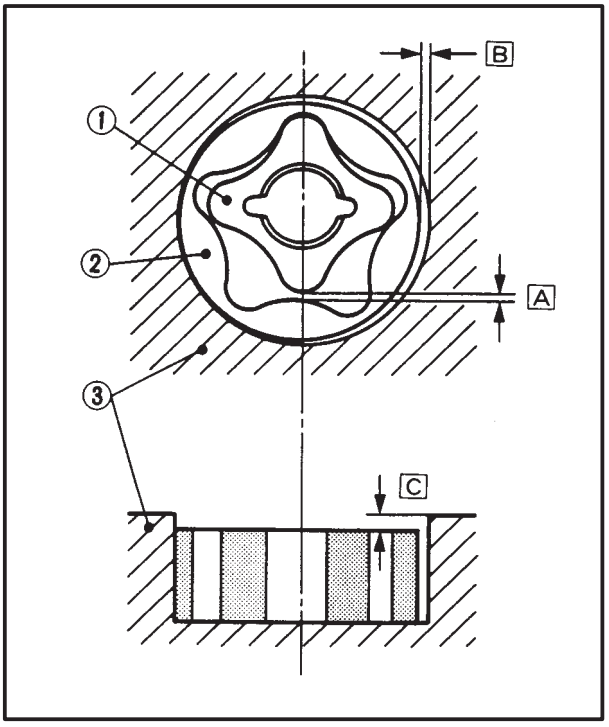

2. Measure:
   - inner-rotor to outer-rotor tip clearance A
   - outer-rotor to oil-pump-housing clearance B
   - oil-pump-housing to inner-rotor and outer-rotor clearance C

   Outer of specification → Replace the oil pump.

① Inner rotor
② Outer rotor
③ Oil pump housing

Inner-rotor to outer-rotor tip clearance
0.12 ~ 0.17 mm <Limit 0.2 mm>
Outer-rotor to oil-pump-housing clearance
0.03 ~ 0.08 mm <Limit 0.15 mm>
Oil-pump-housing to inner-rotor and outer-rotor clearance
0.03 ~ 0.08 mm <Limit 0.15 mm>

3. Check:
   - oil pump operation

   Unsmooth → Repeat steps (1) and (2) or replace the defective part(-s).

EAS00375

ASSEMBLING THE OIL PUMP

1. Lubricate:
   - inner rotor
   - outer rotor
   - oil pump shaft
     (with the recommended lubricant)

	Recommended lubricant **Engine oil**

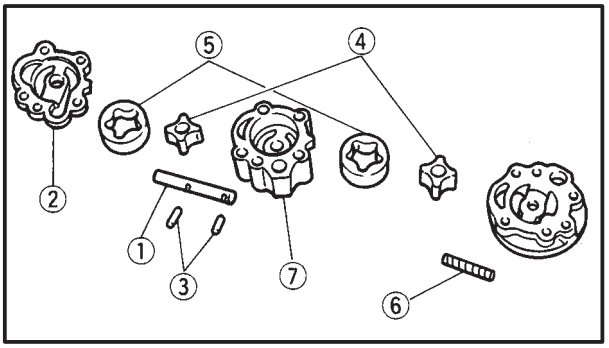

2. Install:
   - oil pump shaft ①
     (to the oil pump cover ②)
   - pin ③
   - inner rotor ④
   - outer rotor ⑤
   - pin ⑥
   - oil pump housing ⑦
   - screw

	Oil pump housing screw **10 Nm (1.0 m•kg)**

NOTE:

When installing the inner rotor, align the pin ③ in the oil pump shaft with the groove on the inner rotor ④.

3. Check:
   - oil pump operation
     Refer to “CHECKING THE OIL PUMP”.

EAS00376

INSTALLING THE OIL PUMP

1. Install:
   - oil pump ①

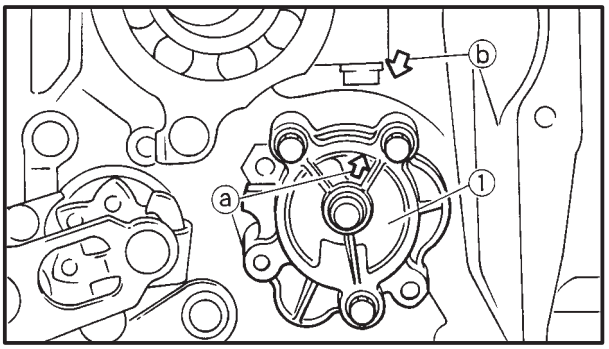

	Oil pump bolt **10 Nm (1.0 m•kg)**

CAUTION:

After tightening the bolts, make sure that the oil pump turns smoothly.

NOTE:

Align the arrow ⓐ on the oil pump with the arrow ⓑ on the crankcase.

EAS00327
SHIFT SHAFT

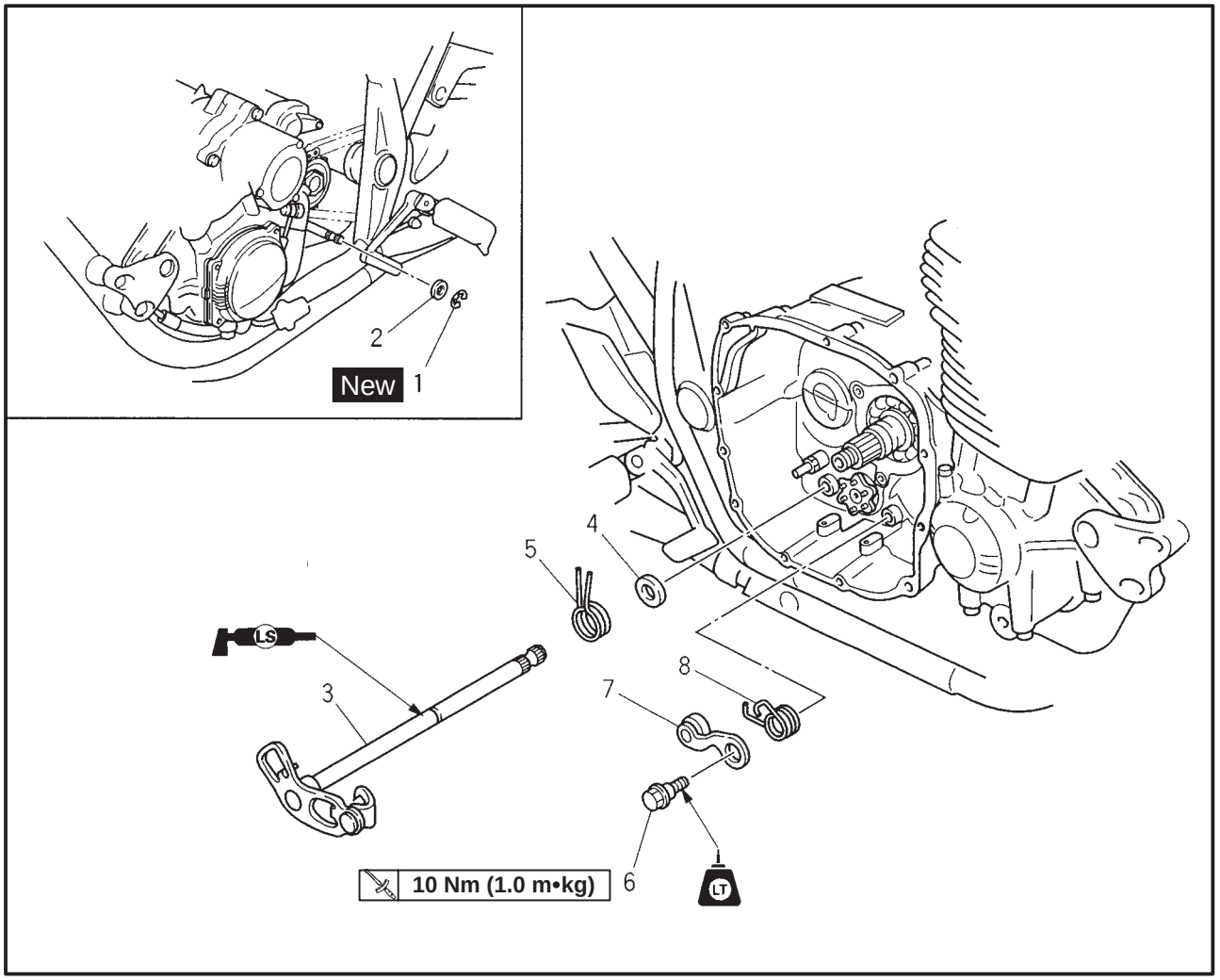

Order	Job/Part	Q'ty	Remarks
	Removing the shift shaft and stopper lever		Remove the parts in the order listed.
	Oil pump		Refer to "OIL PUMP".
	Drive sprocket cover		Refer to "ENGINE".
1	Circlip	1	Refer to "INSTALLING THE SHIFT SHAFT".
2	Washer	1	
3	Shift shaft	1	
4	Washer	1	
5	Shift lever spring	1	
6	Bolt	1	
7	Stopper lever	1	
8	Stopper lever spring	1	
			For installation, reverse the removal procedure.

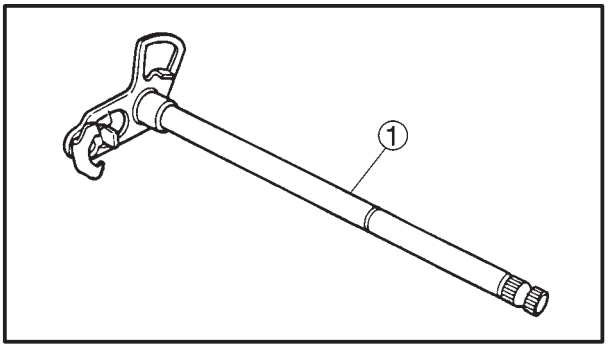

EAS00328

CHECKING THE SHIFT SHAFT

1. Check:
   - shift shaft ①
     Bends/damage/wear → Replace.
   - shift lever spring
     Damage/wear → Replace.

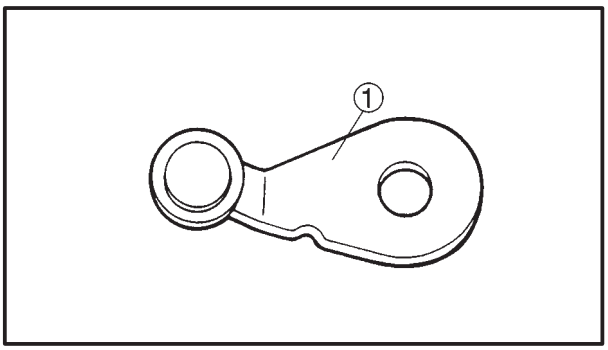

EAS00330

CHECKING THE STOPPER LEVER

1. Check:
   - stopper lever ①
     Bends/damage → Replace.
     Roller turns roughly → Replace the stopper lever.

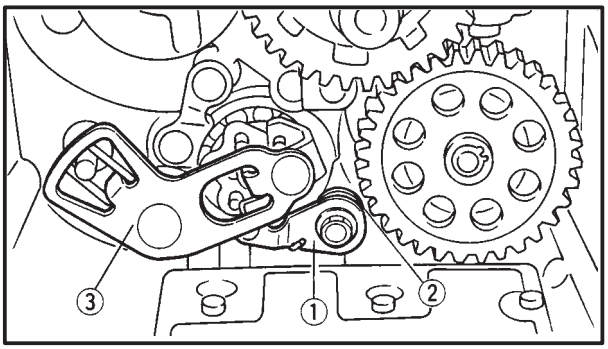

EAS00331

INSTALLING THE SHIFT SHAFT

1. Install:
   - stopper lever ①
   - stopper lever spring ②
   - shift shaft lever ③

NOTE:

- Hook the ends of the stopper lever spring onto the stopper lever and the crankcase boss.
- Mesh the stopper lever with the shift drum segment assembly.

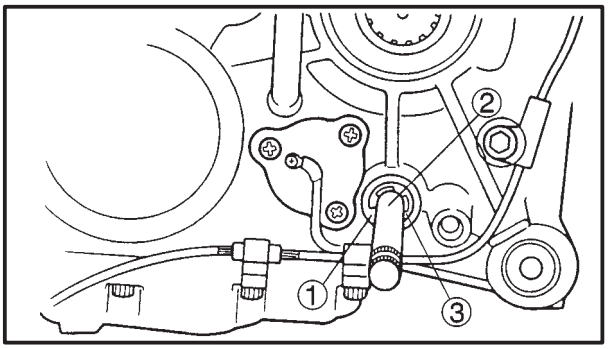

2. Install:
   - washer ①
   - shift shaft ②
   - circlip ③

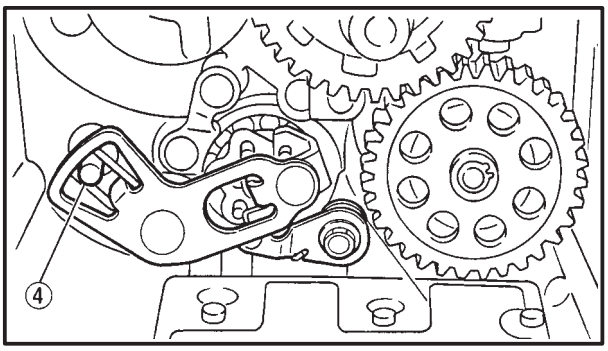

NOTE:

- Lubricate the oil seal lips with lithium soap base grease.
- Hook the end of the shift lever spring onto the shift lever spring stopper ④.

TIMING PLATE AND PICKUP COIL

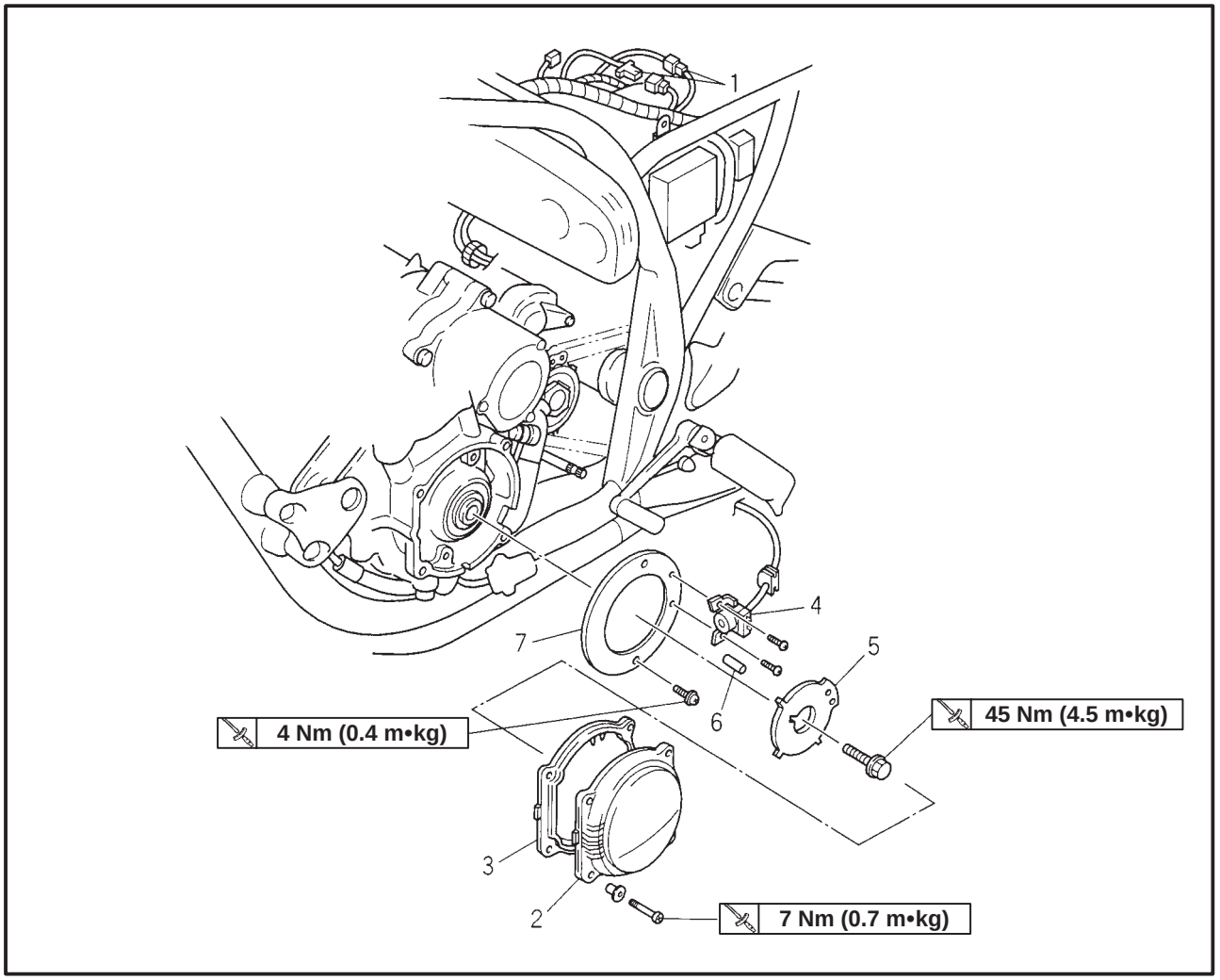

Order	Job/Part	Q'ty	Remarks
	Removing the timing plate and pickup coil		Remove the parts in the order listed.
	Seat, side cover, fuel tank		
1	Pickup coil read	1	
2	Timing plate cover	1	
3	Gasket	1	
4	Pickup coil	1	
5	Timing plate	1	
6	Dowel pin	1	
7	Pickup base	1	
			For installation, reverse the removal procedure.

OIL PAN

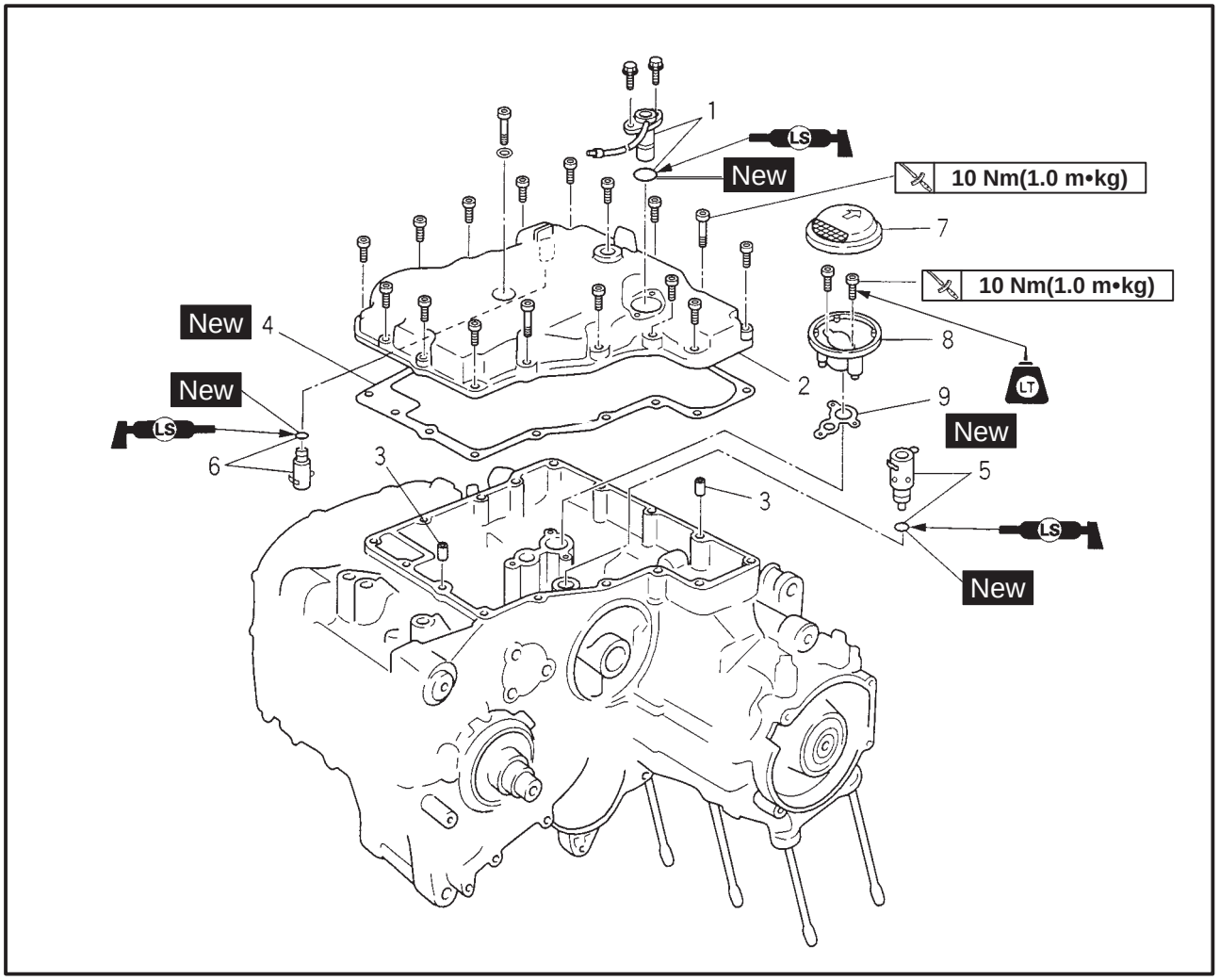

Order	Job/Part	Q'ty	Remarks
	Removing the oil pan		Remove the parts in the order listed.
	Engine		Refer to "ENGINE".
1	Oil level switch/O-ring	1/1	Refer to "REMOVING/INSTALLING THE OIL PAN".
2	Oil pan	1	
3	Dowel pin	2	
4	Gasket	1	
5	Relief valve/O-ring	1/1	
6	Relief valve/O-ring	1/1	
7	Oil strainer	1	Refer to "INSTALLING THE OIL STRAINER".
8	Oil strainer housing	1	
9	Gasket	1	
			For installation, reverse the removal procedure.

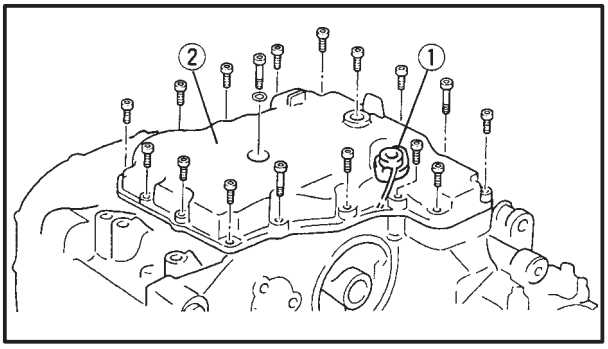

EAS00362

REMOVING THE OIL PAN

1. Remove:
   - oil level switch ①
   - oil pan ②
   - gasket
   - dowel pins

NOTE:

Loosen each bolt 1/4 of a turn at a time, in stages and in a crisscross pattern. After all of the bolts are fully loosened, remove them.

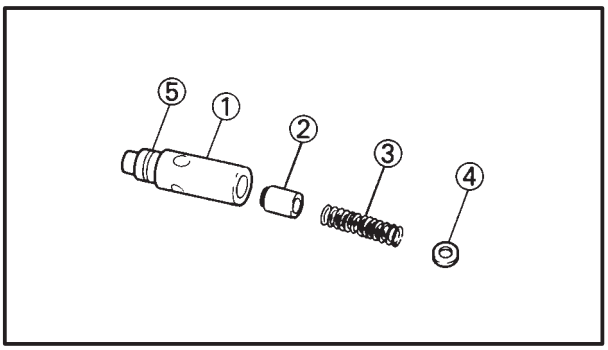

EAS00365

CHECKING THE RELIEF VALVE

1. Check:
   - relief valve body ①
   - relief valve ②
   - spring ③
   - Cover ④
     Damage/wear → Replace the defective part(-s).
   - circlip ⑤

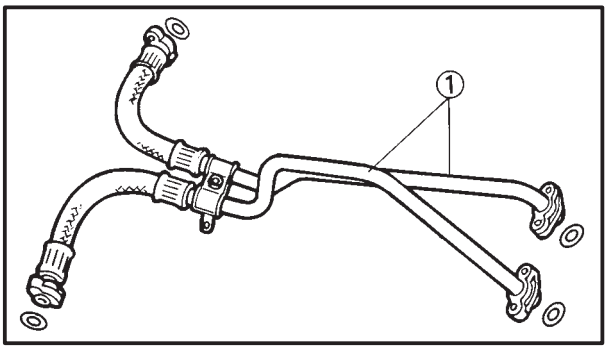

EAS00367

CHECKING THE OIL DELIVERY PIPES

The following procedure applies to all of the oil delivery pipes.

1. Check:
   - oil delivery pipe ①
     Damage → Replace.
     Obstruction → Wash and blow out with compressed air.

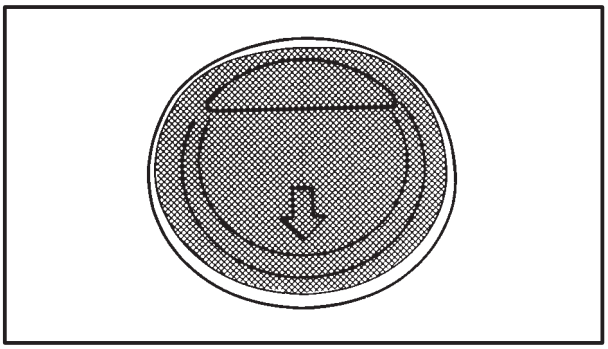

EAS00368

CHECKING THE OIL STRAINER

1. Check:
   - oil strainer
     Damage → Replace.
     Contaminants → Clean with engine oil.

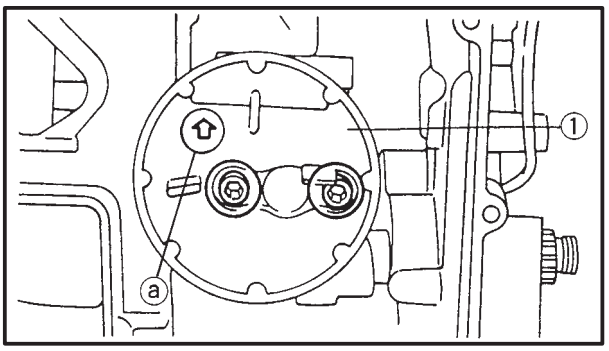

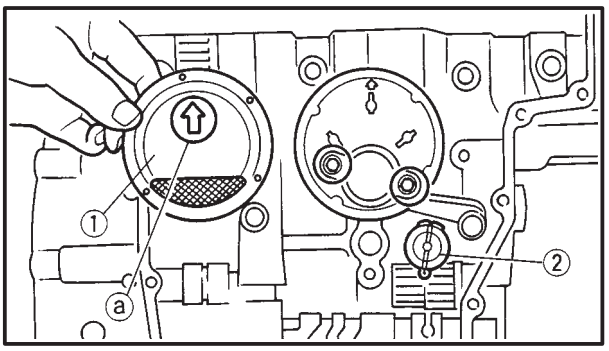

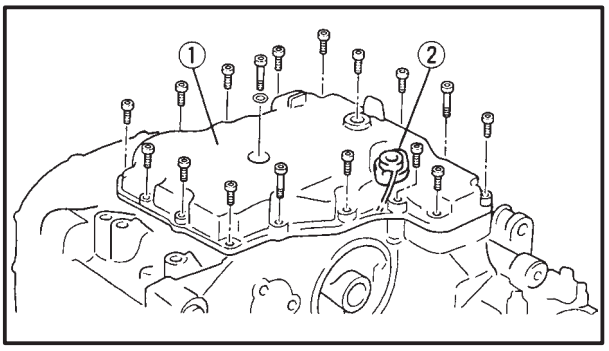

EAS00378

INSTALLING THE OIL STRAINER

1. Install:
   - oil strainer housing ①

Oil strainer housing bolt
10 Nm (1.0 m•kg)
LOCTITE®

NOTE:

The arrow ⓐ on the oil strainer housing must point towards the front of the engine.

2. Install:
   - oil strainer cover ①
   - relief valve ②

NOTE:

The arrow ⓐ on the oil strainer cover must point towards the front of the engine.

EAS00380

INSTALLING THE OIL PAN

1. Install:
   - dowel pins
   - gasket (New)
   - oil pan ①
   - oil level switch ②
   - engine oil drain bolt

⚠ WARNING

Always use new copper washers.

NOTE:

- Tighten the oil pan bolts in stages and in a crisscross pattern.
- Lubricate the oil level switch's O-ring with engine oil.

Oil pan bolt
10 Nm (1.0 m•kg)
Oil level switch bolt
10 Nm (1.0 m•kg)

CRANKCASE

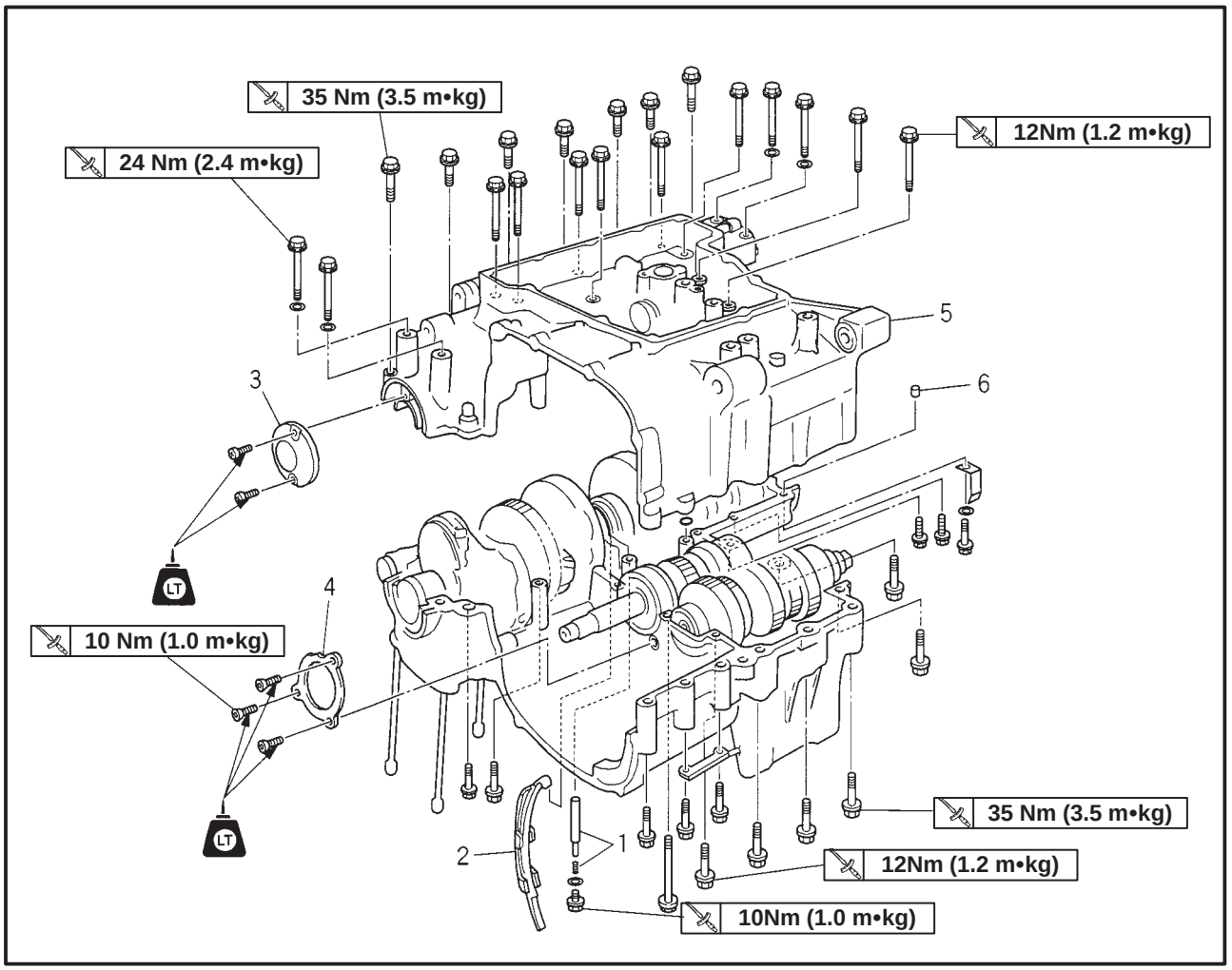

Order	Job/Part	Q'ty	Remarks
	Removing the oil pan		Remove the parts in the order listed.
	Engine		Refer to "ENGINE".
	Camshafts		Refer to "CAMSHAFTS".
	Cylinder head		Refer to "CYLINDER HEAD".
	Cylinder, piston		Refer to "CYLINDERS AND PISTONS".
	Clutch		Refer to "CLUTCH".
	Oil pump		Refer to "OIL PUMP".
	Shift shaft		Refer to "SHIFT SHAFT".
	Timing plate, pickup coil		Refer to "TIMING PLATE AND PICKUP COIL".
	Oil strainer		Refer to "OIL PAN".
1	Spring/rod	1/1	
2	Chain guide	1	
3	Cover	1	

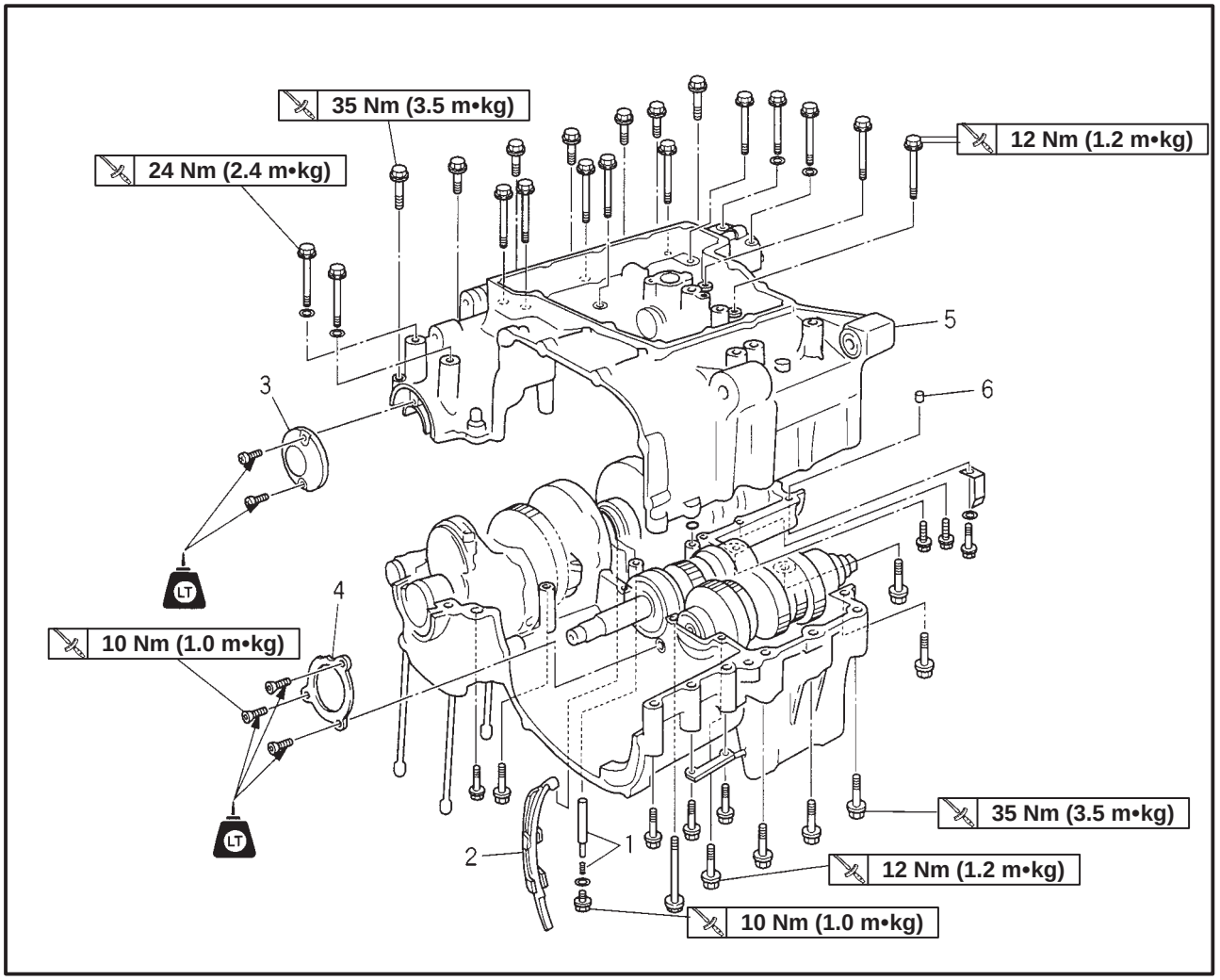

Order	Job/Part	Q'ty	Remarks
4	Bearing cover	1	
5	Crankcase (lower)	1	Refer to "DISASSEMBLING/ASSEMBLING THE CRANKCASE".
6	Dowel pin	2	
			For installation, reverse the removal procedure.

EAS00384

DISASSEMBLING THE CRANKCASE

1. Remove:
   - crankcase bolts

NOTE:

- Loosen each bolt 1/4 of a turn at a time, in stages and in a crisscross pattern. After all of the bolts are fully loosened, remove them.
- Loosen the bolts in decreasing numerical order (refer to the numbers in the illustration).
- The numbers embossed on the crankcase indicate the crankcase tightening sequence.

2. Place the engine upside down.
3. Remove:
   - lower crankcase

A Upper crankcase

☆ : M10 bolts

× : M8 bolts

Δ : M6 bolts

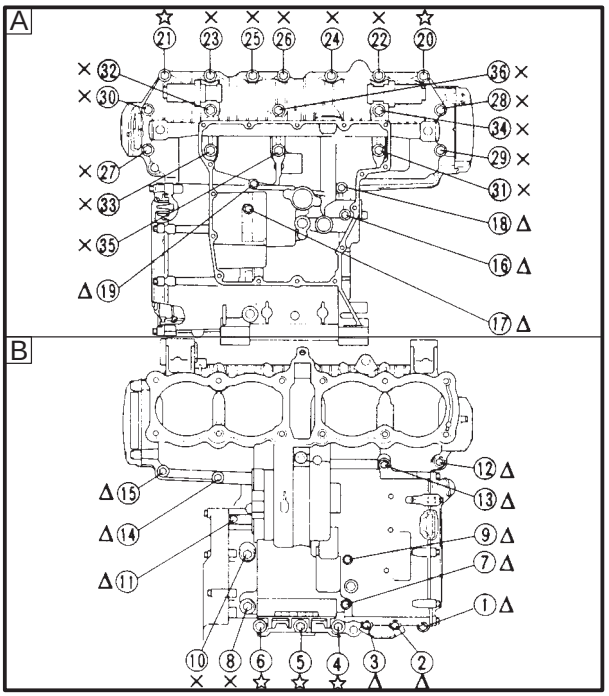

CAUTION:

Tap on one side of the crankcase with a soft-face hammer. Tap only on reinforced portions of the crankcase, not on the crankcase mating surfaces. Work slowly and carefully and make sure that the crankcase halves separate evenly.

4. Remove:
   - dowel pins
   - O-ring

B Lower crankcase

☆ : M10 bolts

× : M8 bolts

Δ : M6 bolts

5. Remove:
   - crankshaft journal lower bearing (from the lower crankcase)

NOTE:

Identify the position of each crankshaft journal lower bearing so that it can be reinstalled in its original place.

EAS00399

CHECKING THE CRANKCASE

1. Throughly wash the crankcase halves in a mild solvent.
2. Thoroughly clean all the gasket surfaces and crankcase mating surfaces.
3. Check:
   - crankcase
     Cracks/damage → Replace.
   - oil delivery passages
     Obstruction → Blow out with compressed air.

EAS00412

ASSEMBLING THE CRANKCASE

1. Lubricate:
   - crankshaft journal bearings
     (with the recommended lubricant)

	Recommended lubricant **Engine oil**

2. Apply:
   - sealant
     (onto the crankcase mating surfaces)

	Yamaha bond No. 1215 **90890-85505**

NOTE:

Do not allow any sealant to come into contact with the oil gallery or crankshaft journal bearings. Do not apply sealant to within 2 ~ 3 mm of the crankshaft journal bearings.

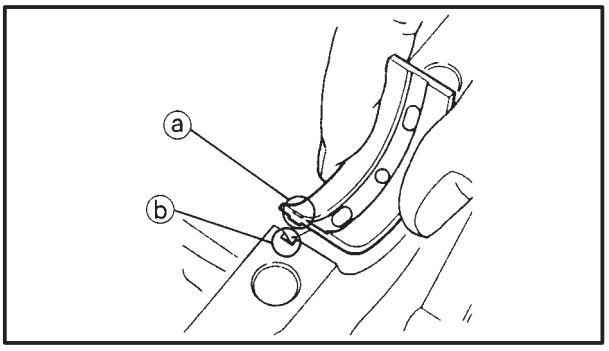

3. Install:
   - dowel pin
4. Install:
   - crankshaft journal lower bearings
     (into the lower crankcase)

NOTE:

- Align the projections ⓐ on the crankshaft journal lower bearings with the notches ⓑ in the crankcase.
- Install each crankshaft journal lower bearing in its original place.

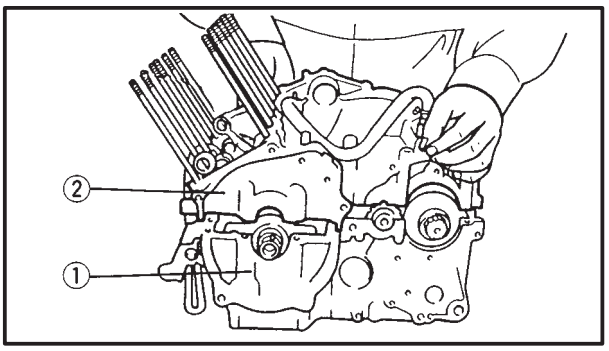

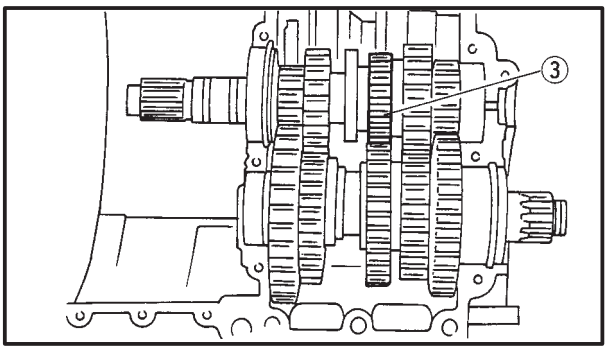

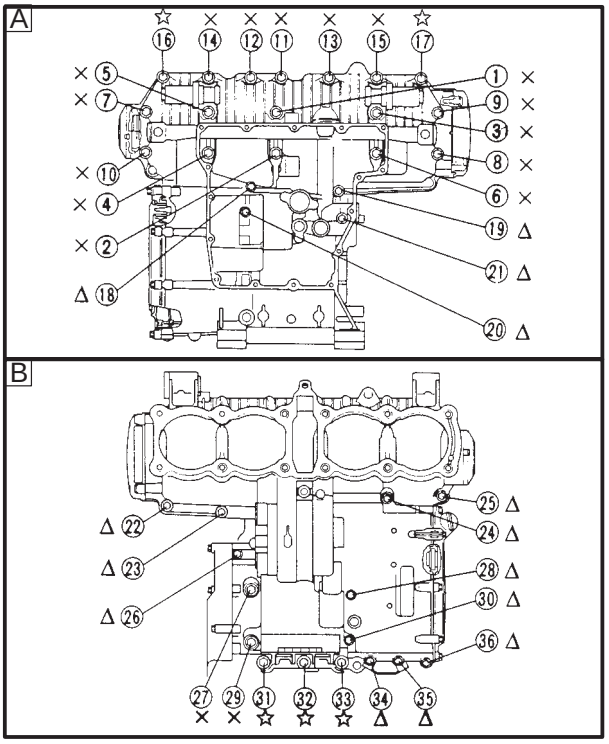

5. Set the shift drum assembly and transmission gears in the neutral position.
6. Install:
   - lower crankcase ①
     (onto the upper crankcase ②)

CAUTION:

Before tightening the crankcase bolts, make sure that the transmission gears shift correctly when the shift drum assembly is turned by hand.

NOTE:

- Carefully position the shift forks so that they mesh smoothly with the transmission gears.
- Mesh shift fork center with the 2nd pinion gear ③ on the main axle.

7. Install:
   - lower crankcase bolts
   - upper crankcase bolts

NOTE:

Tighten the bolts in the tightening sequence cast on the crankcase.

A Upper crankcase

B Lower crankcase

	☆ **M10 bolt (⑯, ⑰, ㉛ ~ ㉝): 35 Nm (3.5 m•kg)** × **M8 bolt (① ~ ⑮, ㉗, ㉙): 24 Nm (2.4 m•kg)** Δ **M6 bolt (⑱ ~ ㉖, ㉘, ㉚, ㉞ ~ ㊱): 12 Nm (1.2 m•kg)**

8. Install:
   - clutch cover

	Clutch cover bolt 10 Nm (1.0 m•kg)

EAS00342
STARTER CLUTCH

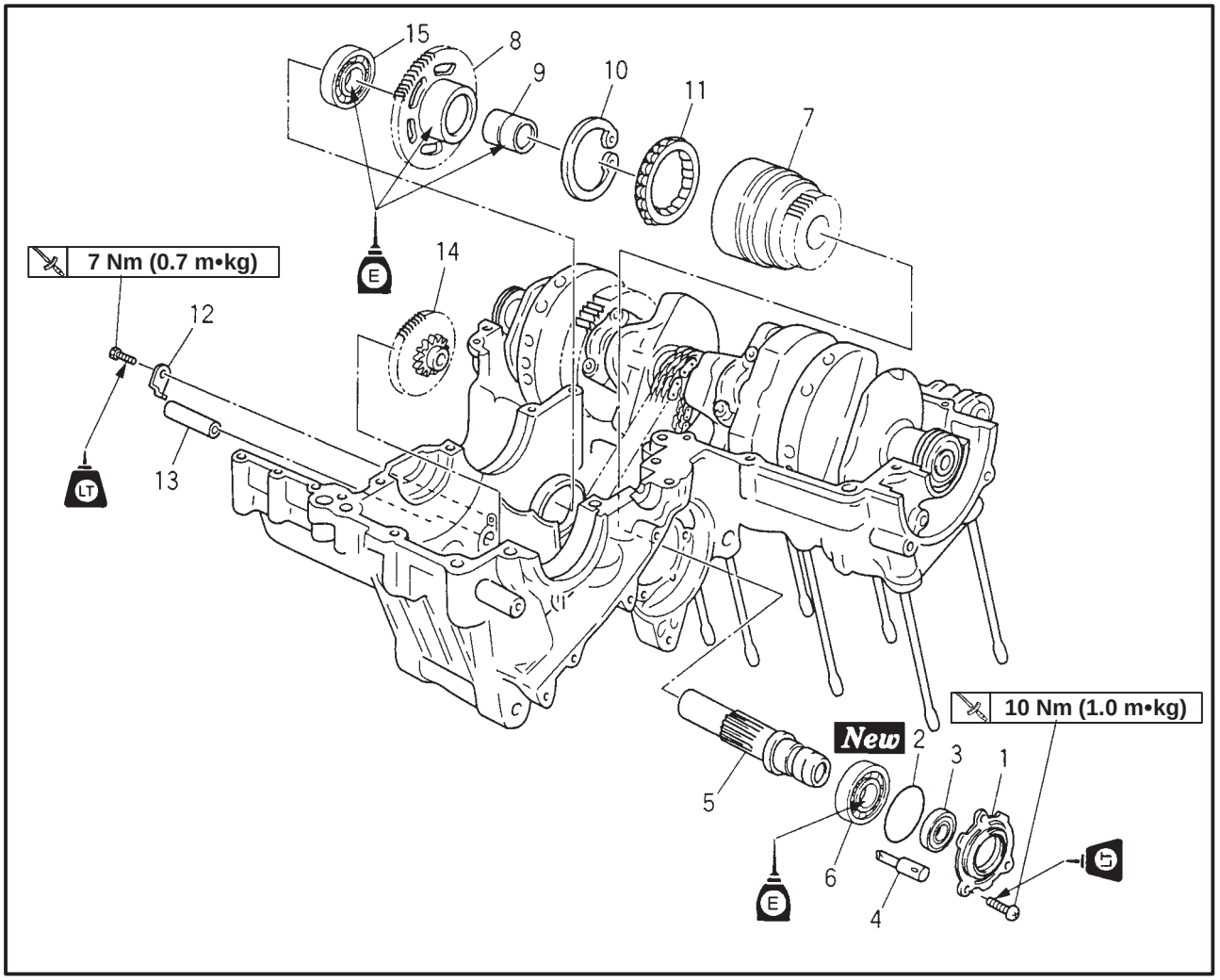

Order	Job/Part	Q'ty	Remarks
	Removing the starter clutch		Remove the parts in the order listed.
	Crankcase		Refer to "CRANKCASE".
1	Bearing housing	1	
2	O-ring	1	
3	Oil seal	1	
4	Nozzle	1	
5	Generator shaft	1	
6	Bearing	1	
7	Starter clutch drive gear	1	Refer to "INSTALLING THE STARTER CLUTCH".
8	Starter clutch gear	1	
9	Collar	1	
10	Circlip	1	Refer to "INSTALLING THE STARTER CLUTCH".
11	Starter clutch roller	1	
12	Stopper plate	1	

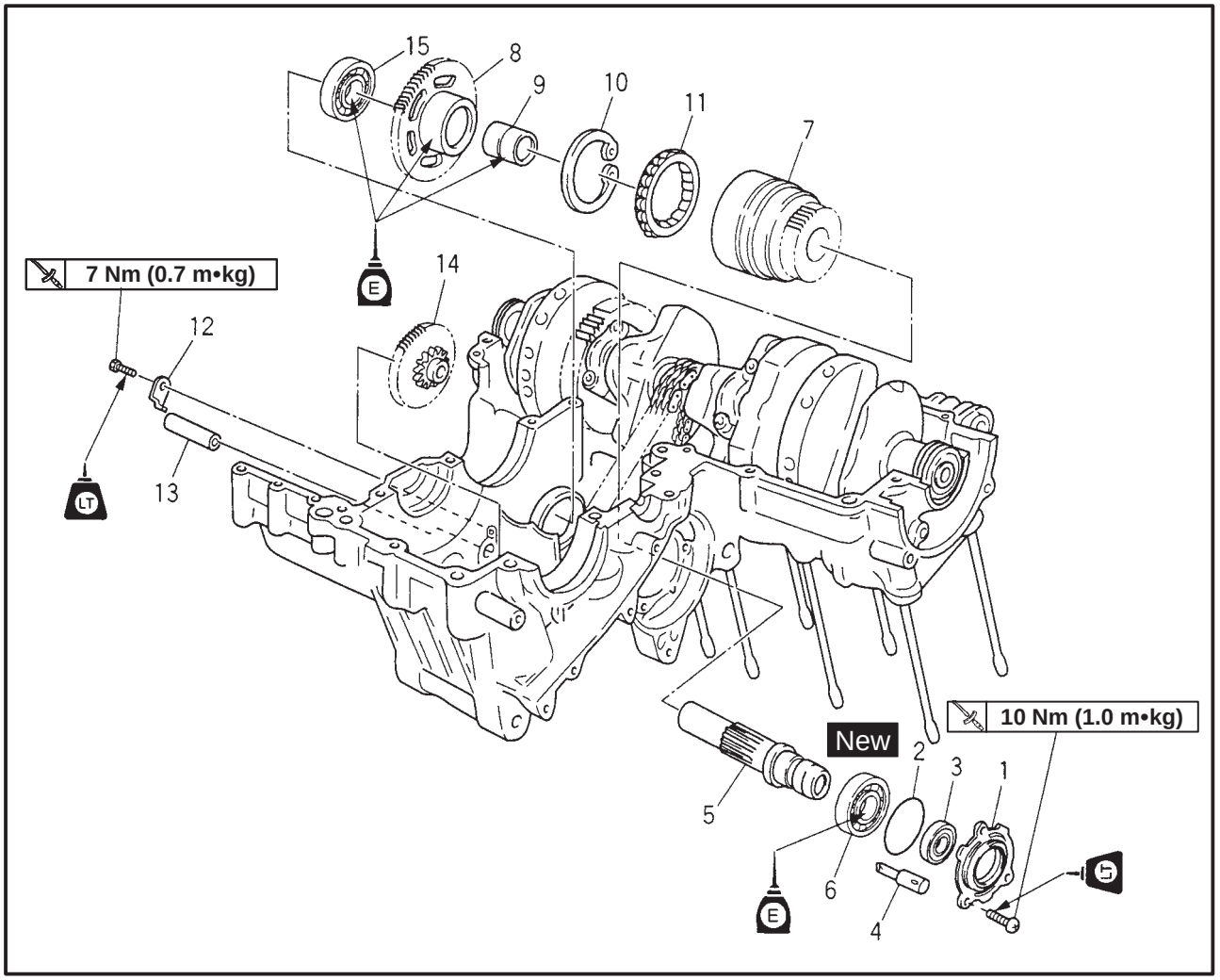

Order	Job/Part	Q'ty	Remarks
13	Idle gear shaft	1	
14	Starter clutch idle gear	1	
15	Bearing	1	
			For installation, reverse the removal procedure.

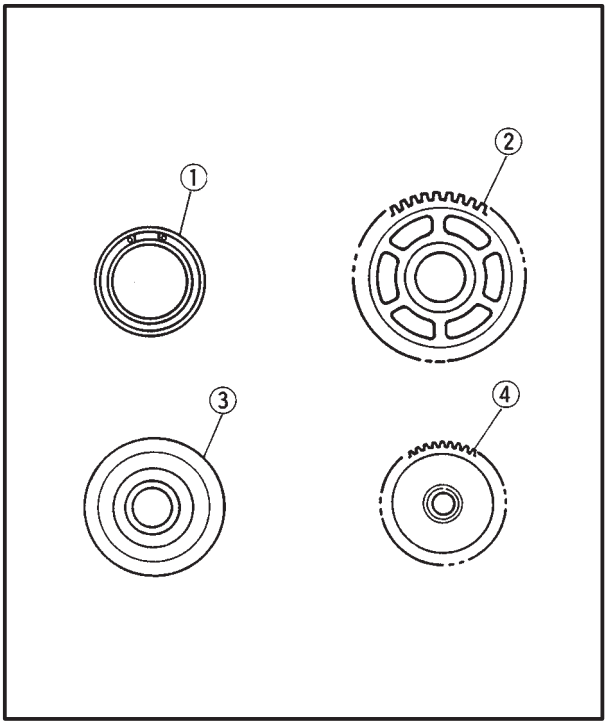

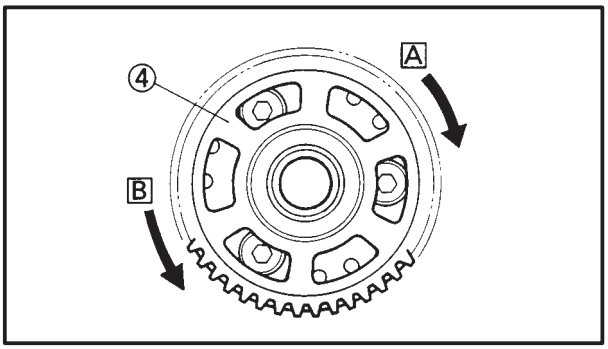

EAS00350

CHECKINHG THE STARTER CLUTCH

1. Check:
   - starter clutch rollers ①
     Damage/wear → Replace.
2. Check:
   - starter clutch idle gear ②
   - starter clutch drive gear ③
   - starter clutch gear ④
     Burrs/chips/roughness/wear → Replace the defective part(-s).
3. Check:
   - starter clutch gear's contacting surfaces
     Damage/pitting/wear → Replace the starter clutch gear.
4. Check:
   - starter clutch operation

▼▼▼▼▼▼▼▼▼▼▼▼▼▼▼▼▼▼▼▼▼▼▼▼▼▼▼▼▼▼▼▼▼▼

a. Install the starter clutch gear ④ onto the starter clutch and hold the starter clutch.
b. When turning the starter clutch drive gear clockwise A, the starter clutch and the starter clutch drive gear should engage.
   If the starter clutch drive gear and starter clutch do not engage, the starter clutch is faulty and must be replaced.
c. When turning the starter clutch drive gear counterclockwise B, it should turn freely.
   If the starter clutch drive gear does not turn freely, the starter clutch is faulty and must be replaced.

▲▲▲▲▲▲▲▲▲▲▲▲▲▲▲▲▲▲▲▲▲▲▲▲▲▲▲▲▲▲▲▲▲▲

5. Check:
   - starter clutch shaft
     Bends/damage/wear → Replace.

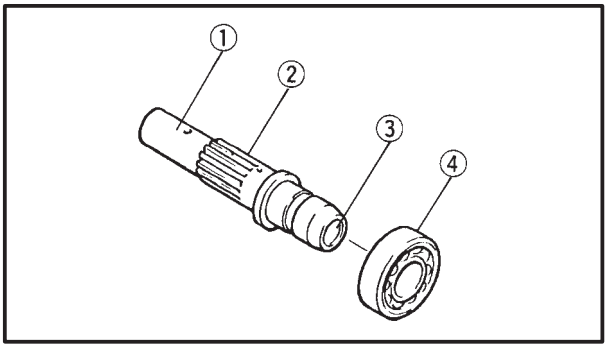

EAS00352

CHECKING THE GENERATOR SHAFT

1. Check:
   - generator shaft ①
   - generator shaft splines ②
     Damage/wear → Replace the generator shaft.
   - oil passages ③
     Dirt/obstruction → Wash the generator shaft and then blow out the oil passages with compressed air.
   - bearing ④
     Rough movement → Replace.

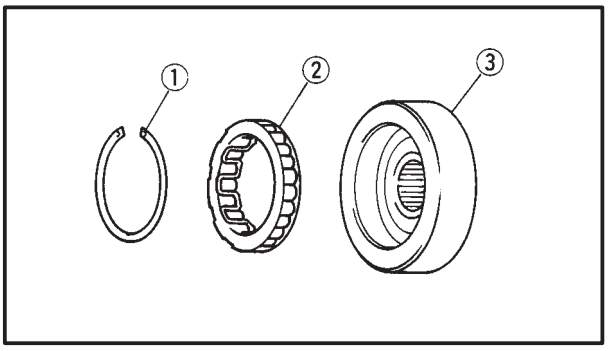

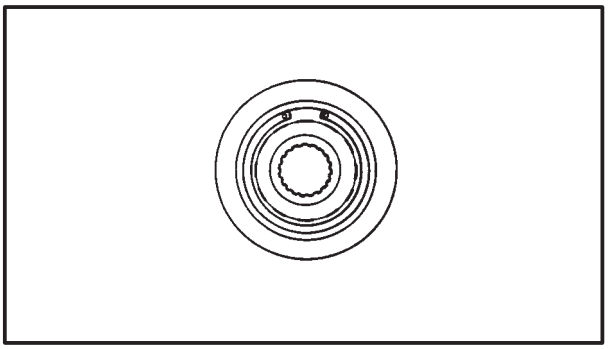

INSTALLING THE STARTER CLUTCH ROLLER

1. Install:
   - circlip ①
   - starter clutch roller ②
   - starter clutch drive gear ③

CAUTION:

Be sure to install the starter clutch roller to the starter clutch drive gear so that the circlip is outside.

EAS00381

CRANKSHAFT

CRANKSHAFT

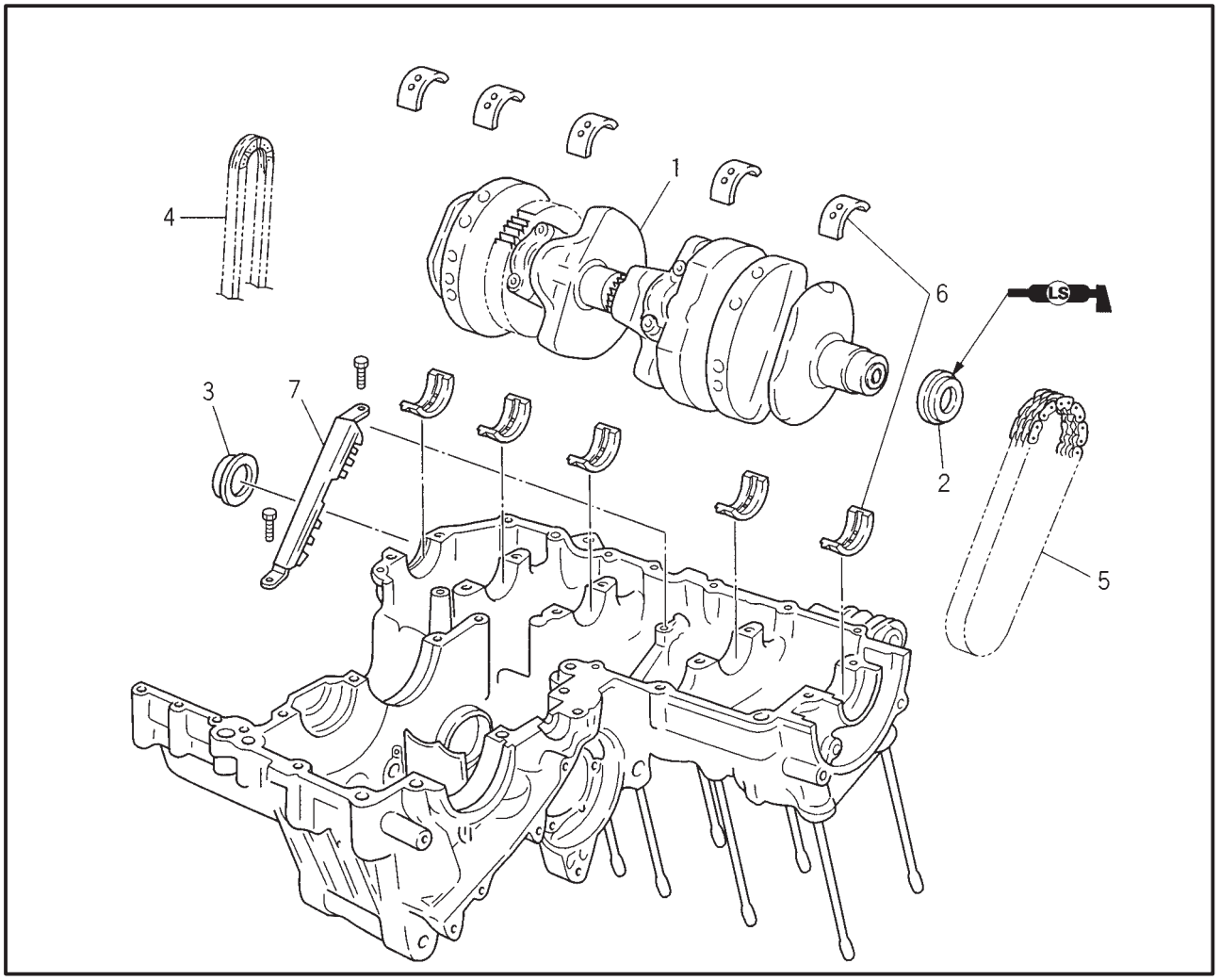

Order	Job/Part	Q'ty	Remarks
	Removing the crankshaft assembly		Remove the parts in the order listed.
	Crankcase		Refer to "CRANKCASE".
	Starter clutch		Refer to "STARTER CLUTCH".
1	Crankshaft	1	Refer to "INSTALLING THE CRANKSHAFT ASSEMBLY".
2	Oil seal	1	
3	Cover	1	
4	Timing chain	1	
5	HY-VO chain	1	
6	Crankshaft journal bearings	10	Refer to "REMOVING/INSTALLING THE CRANKSHAFT ASSEMBLY".
7	HY-VO chain guide	1	For installation, reverse the removal procedure.

CONNECTING ROD

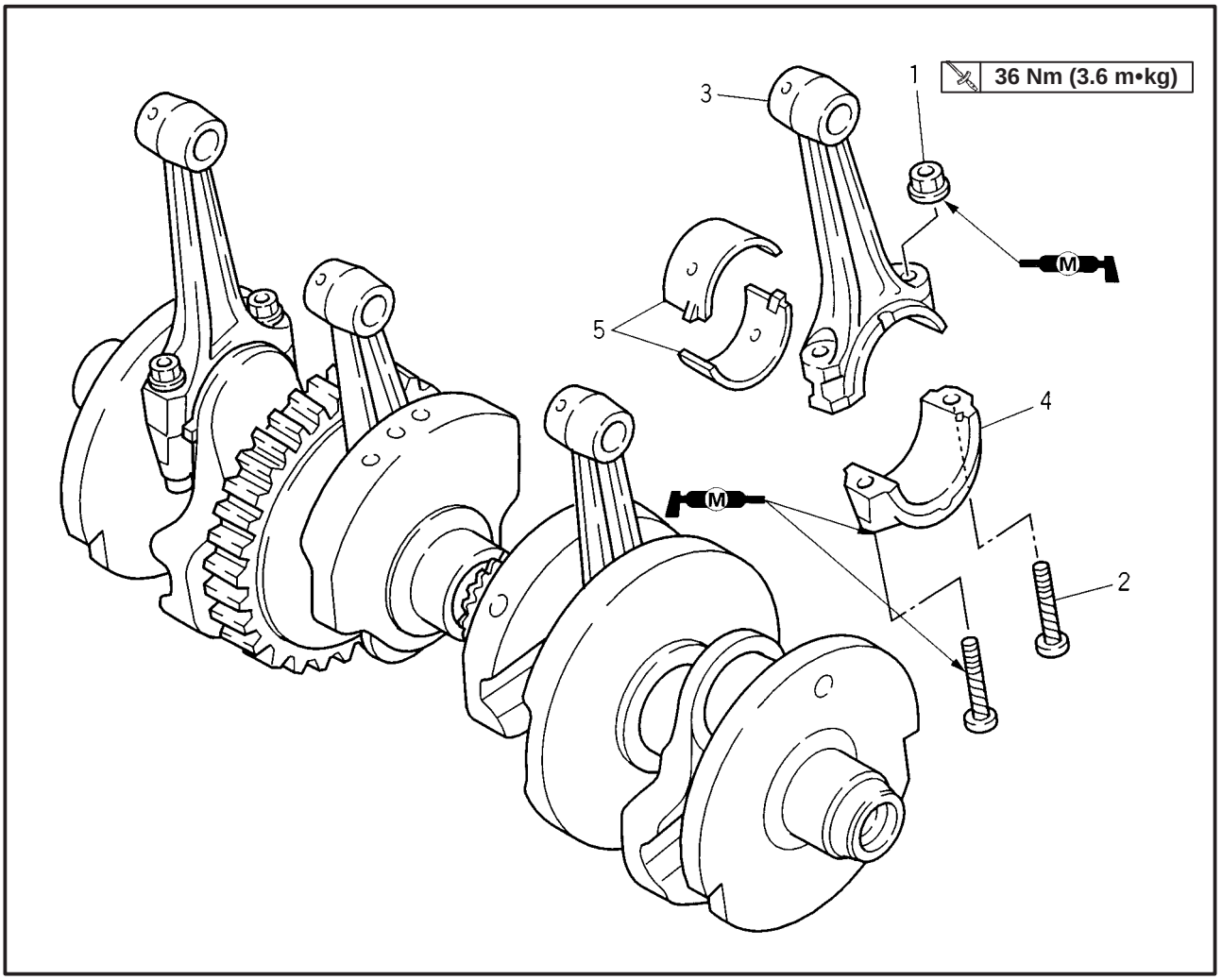

Order	Job/Part	Q'ty	Remarks
	Removing the connecting rod.		Remove the parts in the order listed
1	Nut	8	Refer to "INSTALLING THE CONNEECTING RODS."
2	Connecting rod bolt	8	
3	Coonecting rod	4	Refer to "REMOVING/INSTALLING THE CONNECTING RODS."
4	Connecting rod cap	4	
5	Connecting rod bearing	8	
			For installation, reverse the removal procedur.

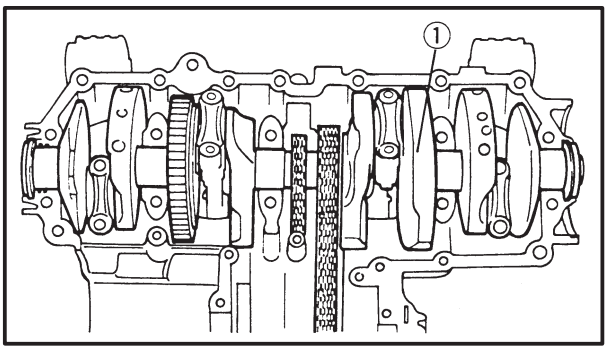

EAS00387

REMOVING THE CRANKSHAFT ASSEMBLY

1. Remove:
   - crankshaft assembly ①
   - crankshaft journal upper bearings (from the upper crankcase)

NOTE:

Identify the position of each crankshaft journal upper bearing so that it can be reinstalled in its original place.

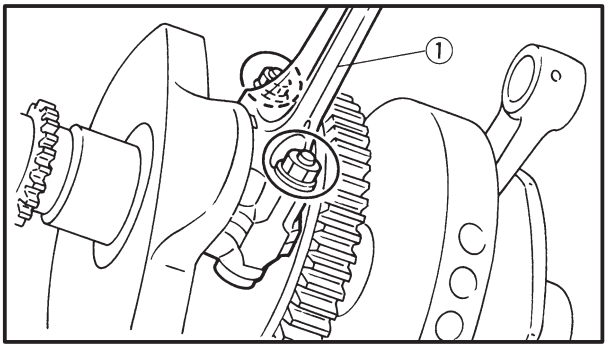

EAS00391

REMOVING THE CONNECTING RODS

1. Remove:
   - connecting rods ①
   - big end bearings

NOTE:

Identify the position of each big end bearing so that it can be reinstalled in its original place.

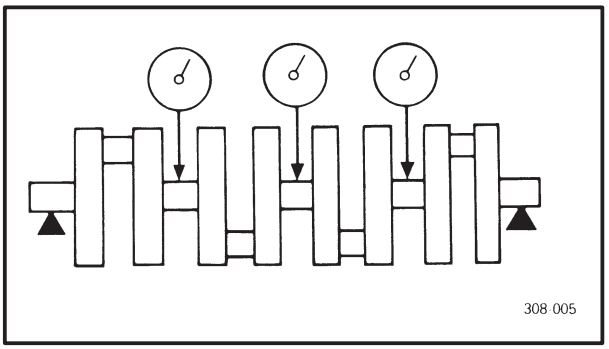

EAS00395

CHECKING THE CRANKSHAFT AND CONNECTING RODS

1. Measure:
   - crankshaft runout
     Out of specification → Replace the crankshaft.

Crankshaft runout
Less than 0.02 mm

2. Check:
   - crankshaft journal surfaces
   - crankshaft pin surfaces
   - bearing surfaces
     Scratches/wear → Replace the crankshaft.
3. Measure:
   - crankshaft-journal-to-crankshaft-journal-bearing clearance
     Out of specification → Replace the crankshaft journal bearings.

Crankshaft-journal to crankshaft-journal-bearing clearance
0.030 ~ 0.064 mm

CAUTION:

Do not interchange the crankshaft journal bearings. To obtain the correct crankshaft-journal-to-crankshaft-journal-bearing clearance and prevent engine damage, the crankshaft journal bearings must be installed in their original positions.

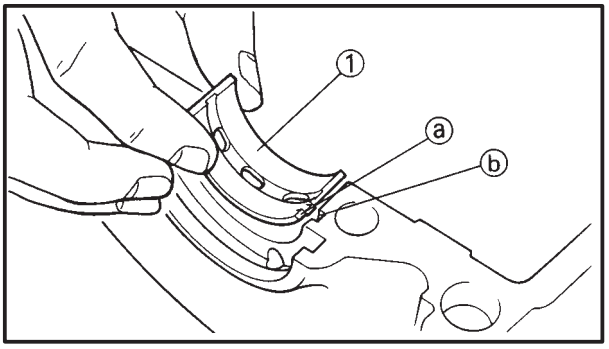

a. Clean the crankshaft journal bearings, crankshaft journals, and bearing portions of the crankcase.
b. Place the upper crankcase upside down on a bench.
c. Install the crankshaft journal upper bearings ① and the crankshaft into the upper crankcase.

NOTE:

Align the projections ⓐ of the crankshaft journal upper bearings with the notches ⓑ in the crankcase.

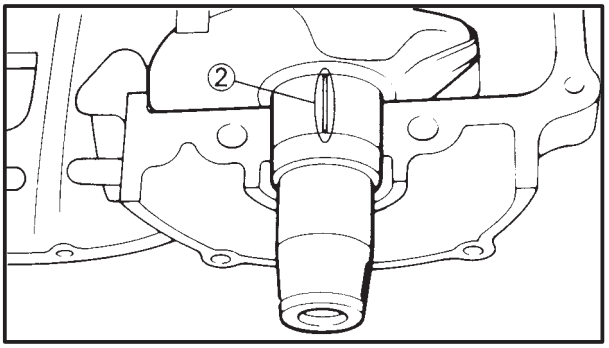

d. Put a piece of Plastigauge® ② on each crankshaft journal.

NOTE:

Do not put the Plastigauge® over the oil hole in the crankshaft journal.

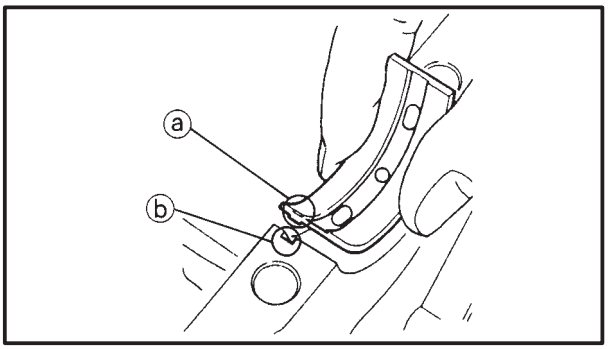

e. Install the crankshaft journal lower bearings into the lower crankcase and assemble the crankcase halves.

NOTE:

- Align the projections ⓐ of the crankshaft journal lower bearings with the notches ⓑ in the crankcase.
- Do not move the crankshaft until the clearance measurement has been completed.

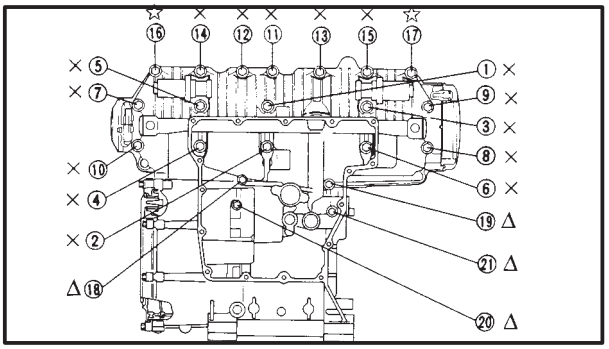

f. Tighten the bolts to specification in the tightening sequence cast on the crankcase.

Crankcase bolt
☆ M10 (No.⑯, ⑰, ㉛ ~ ㉝):
35 Nm (3.5 m•kg)
× M8 (No.① ~ ⑮, ㉗, ㉙):
24 Nm (2.4 m•kg)
Δ M6 (No.⑱ ~ ㉖, ㉘, ㉚, ㉞ ~ ㊱):
12 Nm (1.2 m•kg)

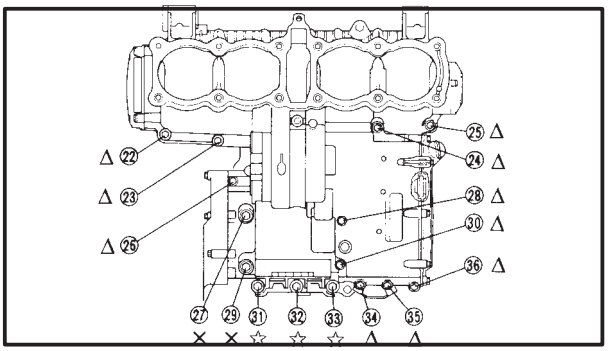

A Upper crankcase
B Lower crankcase

NOTE:

Lubricate the crankcase bolt threads (M8) with engine oil.

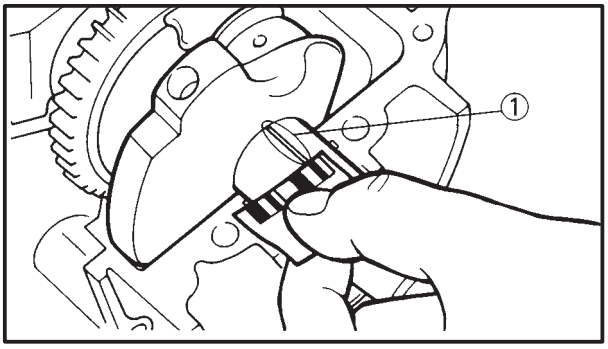

g. Remove the lower crankcase and the crankshaft journal lower bearings.
h. Measure the compressed Plastigauge® width ① on each crankshaft journal.
If the clearance is out of specification, select replacement crankshaft journal bearings.

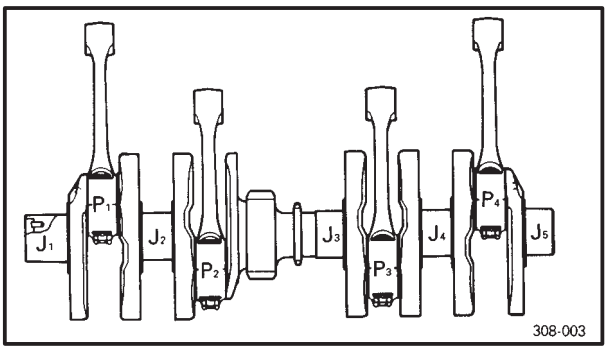

4. Select:
• Crankshaft journal bearings (J_1 ~ J_5)

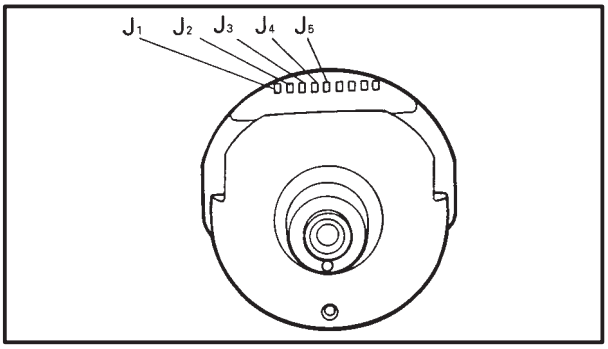

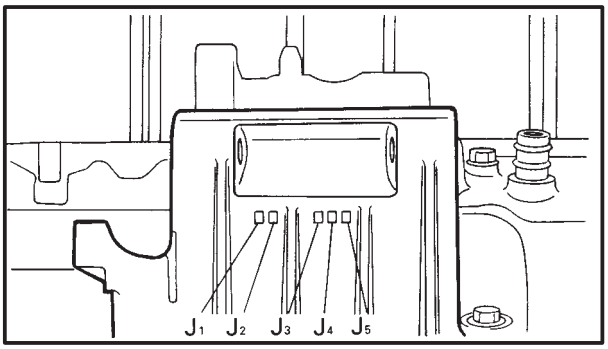

For example, if the crankcase "J_1" and crankshaft web "J_1" numbers are "6" and "2" respectively, then the bearing size for "J_1" is:

Bearing size for J_1:
J_1 (crankcase) – J_1 (crankshaft web) = 6 – 2 = 4 (green)

CRANKSHAFT JOURNAL BEARING (COLOR CODE)	
1	Blue
2	Black
3	Brown
4	Green
5	Yellow

5. Measure:
• crankshaft-pin-to-big-end-bearing clearance
Out of specification → Replace the big end bearings.

Crankshaft-pin-to-big-end-bearing clearance
0.017 ~ 0.040 mm
<Limit: 0.08 mm>

The following procedure applies to all of the connecting rods.

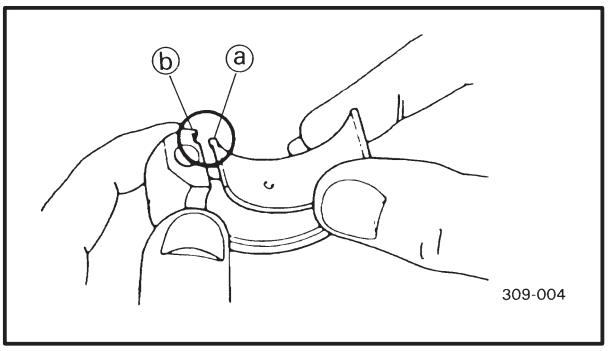

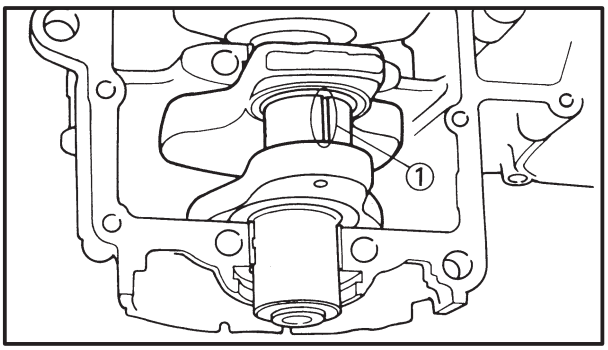

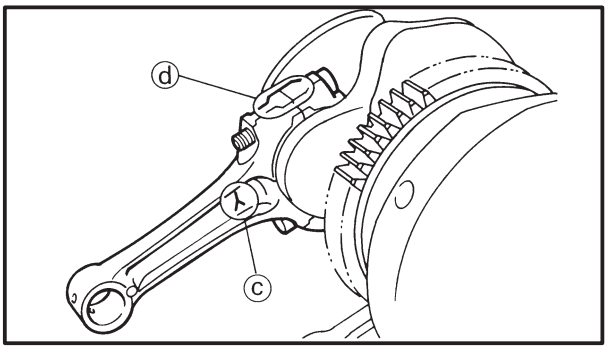

CAUTION:

Do not interchange the big end bearings and connecting rods. To obtain the correct crankshaft-pin-to-big-end-bearing clearance and prevent engine damage, the big end bearings must be installed in their original positions.

a. Clean the big end bearings, crankshaft pins, and bearing portions of the connecting rods.
b. Install the big end upper bearing into the connecting rod and the big end lower bearing into the connecting rod cap.

NOTE:

Align the projections ⓐ on the big end bearings with the notches ⓑ in the connecting rod and connecting rod cap.

c. Put a piece of Plastigauge® ① on the crankshaft pin.
d. Assemble the connecting rod halves.

NOTE:

- Do not move the connecting rod or crankshaft until the clearance measurement has been completed.
- Apply molybdenum disulfide grease onto the bolts, threads, and nuts seats.
- Make sure that the "Y" mark ⓒ on the connecting rod faces towards the left side of the crankshaft.
- Make sure that the characters ⓓ on both the connecting rod and connecting rod cap are aligned.

e. Tighten the connecting rod nuts.

CAUTION:

- **When tightening the connecting rod nuts, be sure to use an F-type torque wrench.**
- **Without pausing, tighten the connecting rod nuts to the specified torque. Apply continuous torque between 2.0 and 3.6 m•kg. Once you reach 2.0 m•kg, DO NOT STOP TIGHTENING until the specified torque is reached. If the tightening is interrupted between 2.0 and 3.6 m•kg, loosen the connecting rod nut to less than 2.0 m•kg and start again.**

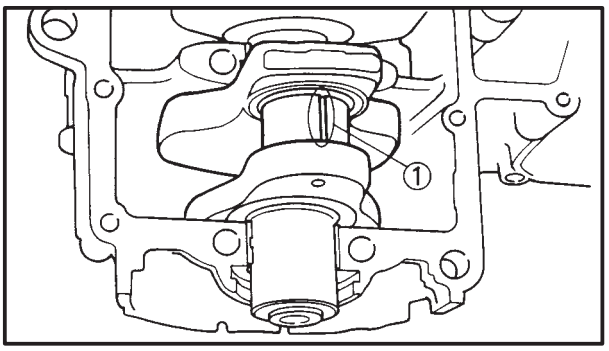

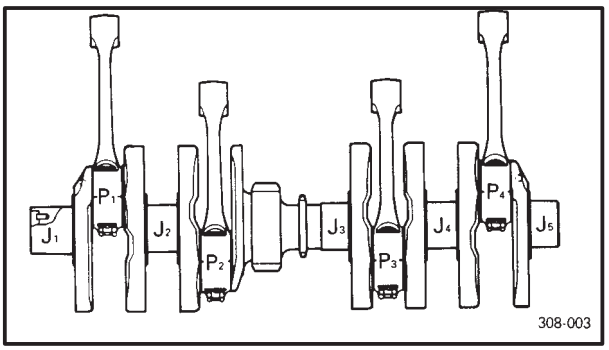

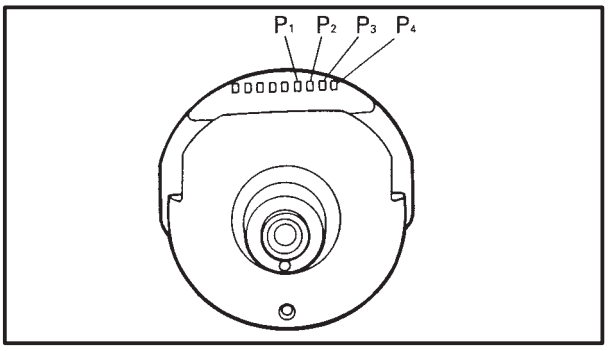

Refer to “INSTALLING THE CONNECTING RODS”.

	Connecting rod nut **36 Nm (3.6 m•kg)**

f. Remove the connecting rod and big end bearings.
   Refer to “REMOVING THE CONNECTING RODS”.
g. Measure the compressed Plastigauge® width ① on the crankshaft pin.
   If the clearance is out of specification, select replacement big end bearings.

6. Select:
   big end bearings (P_1 ~ P_4)

NOTE:

- The numbers stamped into the crankshaft web and the numbers on the connecting rods are used to determine the replacement big end bearing sizes.
- “P1” ~ “P4” refer to the bearings shown in the crankshaft illustration.

For example, if the connecting rod “P_1” and the crankshaft web “P_1” numbers are “4” and “1” respectively, then the bearing size for “P1” is:

Bearing size for “P_1”:
“P_1” (connecting rod) – “P_1” (crak-kshaft) =4 – 1 = 3 (brown)

BIG END BEARING COLOR CODE	
1	Blue
2	Black
3	Brown
4	Green

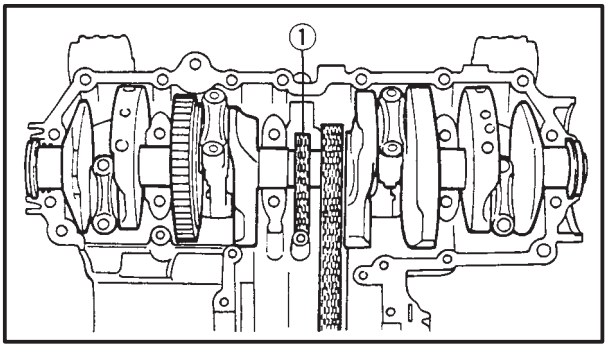

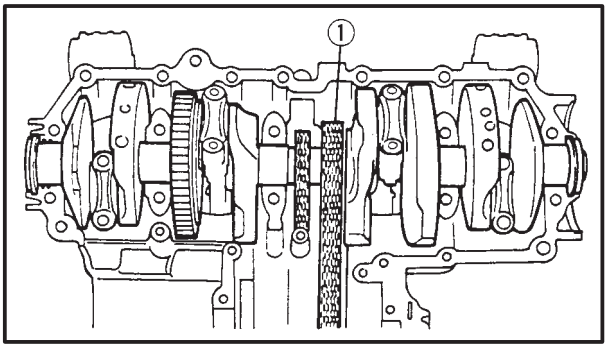

CHECKING THE TIMING CHAIN

1. Check:
   - timing chain ①
     Damage/stiffness → Replace the timing chain and camshaft sprockets as a set.
2. Check
   - timing chain guide (intake side)
     Damage/wear → Replace.

EAS00400

CHECKING THE HY-VO CHAIN

1. Check:
   - HY-VO chain ①
     Damage/stiffness → Replace the HY-VO chain and sprockets as a set.
2. Check:
   - HY-VO chain guide
     Damage/wear → Replace.

EAS00401

CHECKING THE BEARINGS AND OIL SEALS

1. Check:
   - bearings
     Clean and lubricate the bearings, then rotate the inner race with your finger
     Rough movement → Replace.
2. Check:
   - oil seals
     Damage/wear → Replace.

EAS00402

CHECKING THE CIRCLIPS AND WASHERS

1. Check:
   - circlips
     Bends/damage/looseness → Replace.
   - washers
     Bends/damage → Replace.

EAS00403

INSTALLING THE CONNECTING RODS

1. Lubricate:
   - bolt threads
   - nut seats
     (with the recommended lubricant)

	Recommended lubricant **Molybdenum disulfide grease**

2. Lubricate:
   - crankshaft pins
   - big end bearings
   - connecting rod inner surface
     (with the recommended lubricant)

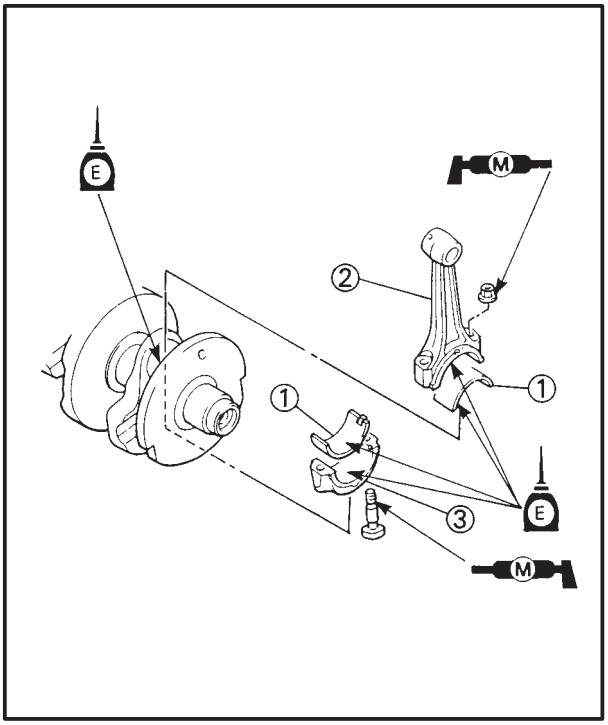

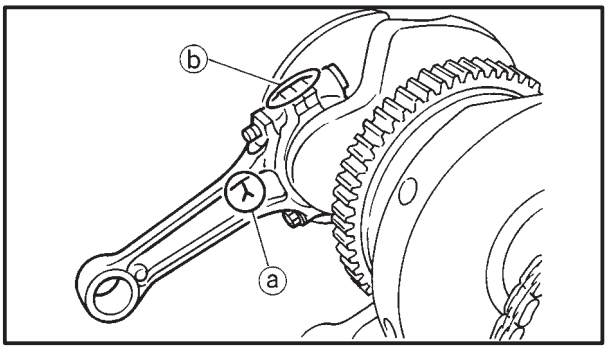

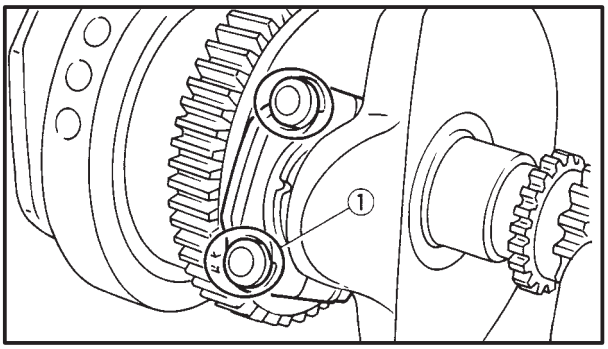

Recommended lubricant
Engine oil

3. Install:
   - big end bearings ①
   - connecting rods ②
   - connecting rod caps ③
     (onto the crankshaft pins)

NOTE:

- Align the projections on the big end bearings with the notches in the connecting rods and connecting rod caps.
- Be sure to reinstall each big end bearing in its original place.
- Make sure that the "Y" marks ⓐ on the connecting rods face towards the left side of the crankshaft.
- Make sure that the characters ⓑ on both the connecting rod and connecting rod cap are aligned.

4. Align:
   - bolt heads ①
     (with the connecting rod caps)
5. Tighten:
   - connecting rod nuts

Connecting rod nuts
36 Nm (3.6 m•kg)

CAUTION:

- **When tightening the connecting rod nuts, be sure to use an F-type torque wrench.**
- **Without pausing, tighten the connecting rod nuts to the specified torque. Apply continuous torque between 2.0 and 3.6 m•kg. Once you reach 2.0 m•kg DO NOT STOP TIGHTENING unitl the specified torque is reached. If the tightening is interrupted between 2.0 and 3.6 m•kg, loosen the connecting rod nut to less than 2.0 m•kg and start again.**

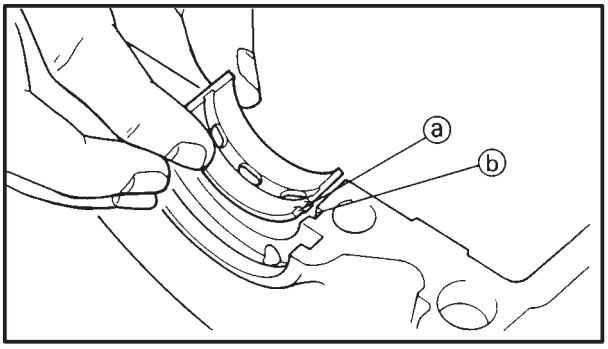

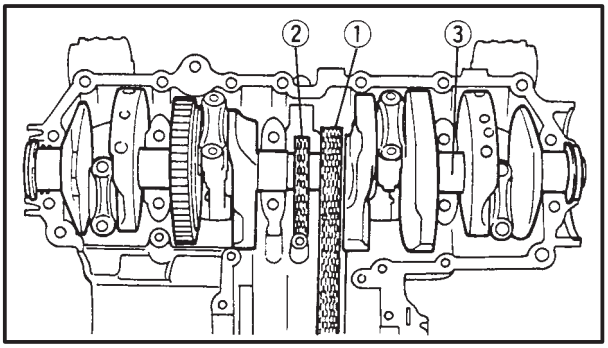

EAS00407

INSTALLING THE CRANKSHAFT

1. Install:
   - crankshaft journal upper bearings (into the upper crankcase)

NOTE:

- Align the projections ⓐ on the crankshaft journal upper bearings with the notches ⓑ in the crankcase.
- Be sure to install each crankshaft journal upper bearing in its original place.

2. Install:
   - HY-VO chain ①
   - timing chain ②
     (onto the crankshaft sprocket)
   - crankshaft assembly ③

NOTE:

- Pass the timing chain through the timing chain cavity.
- To prevent the timing chain from falling into the crankcase, fasten it with a wire.

EAS00419

TRANSMISSION

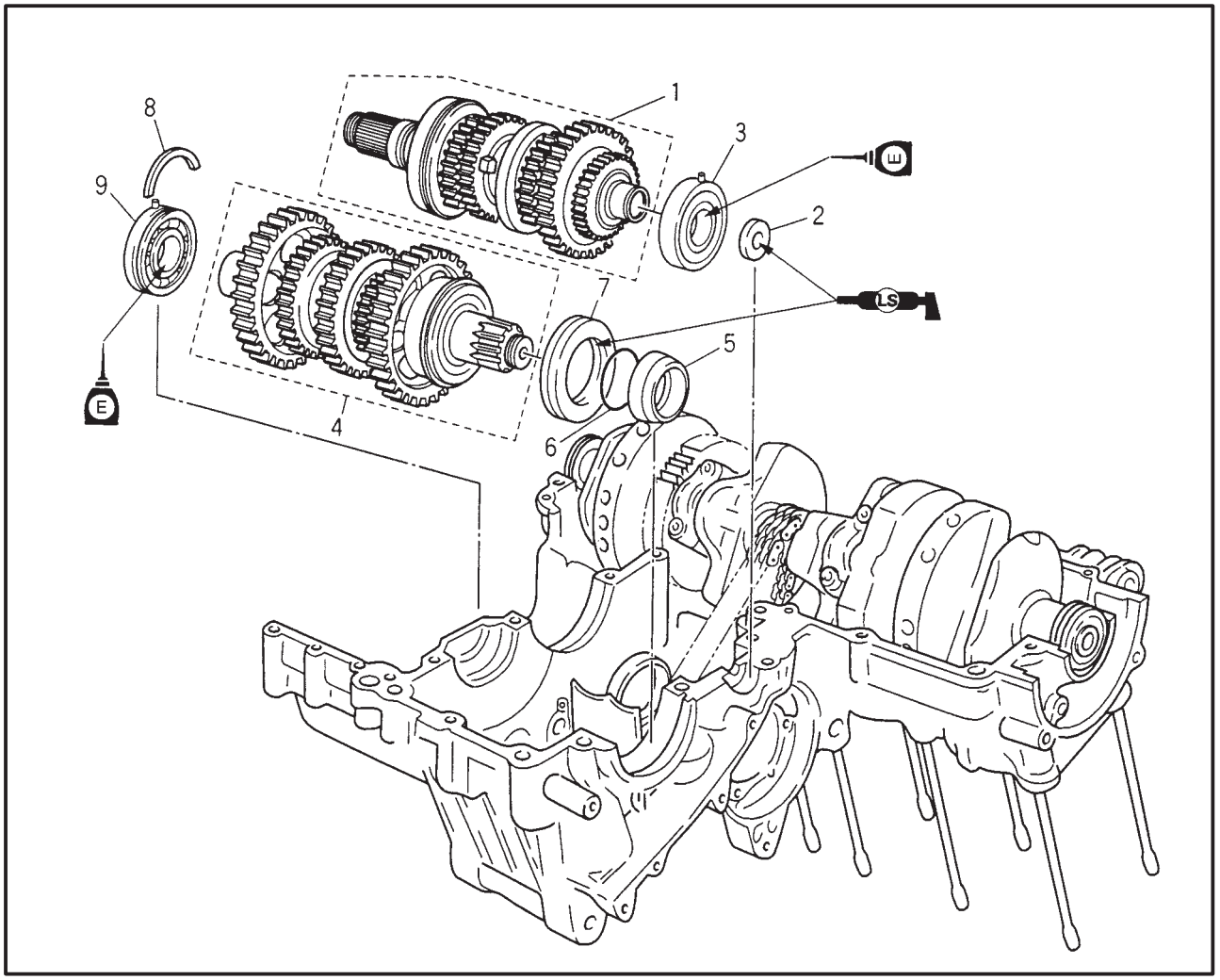

Order	Job/Part	Q'ty	Remarks
	Removing the transmission, shift drum assembly, and shift forks.		Remove the parts in the order listed.
	Crankcase		Refer to "CRANKCASE".
1	Main axle assembly	1	Refer to "INSTALLING THE TRANSMISSION".
2	Oil seal	1	
3	Bearing	1	
4	Drive axle assembly	1	
5	Collar	1	
6	O-ring	1	
7	Oil seal	1	
8	Circlip	1	
9	Bearing	1	
			For installation, reverse the removal procedure.

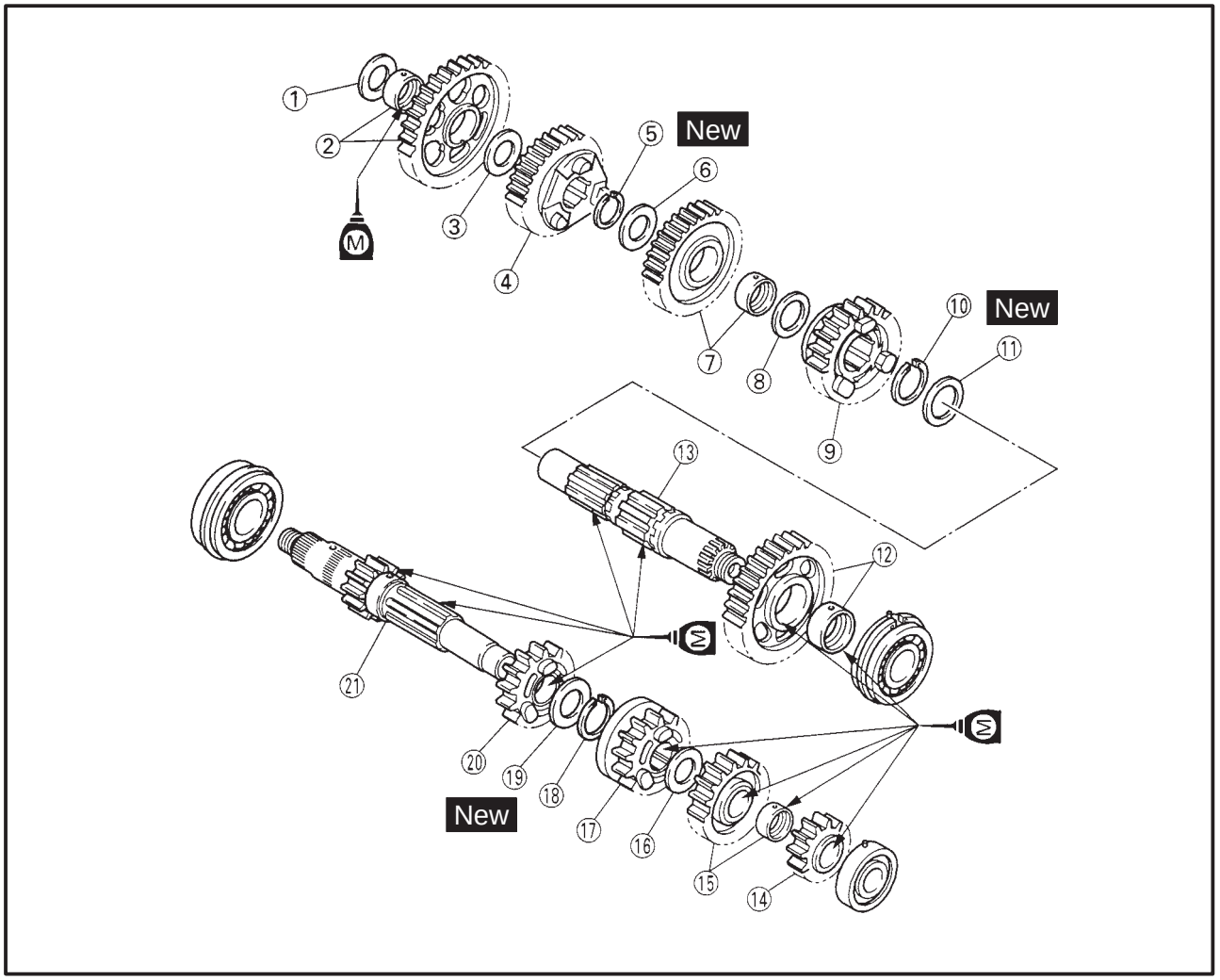

Order	Job/Part	Q'ty	Remarks
	Disassembling the transmission		Disassembly the parts in the order listed.
①	Washer	1	
②	1st wheel gear/Collar	1/1	
③	Washer	1	
④	4th wheel gear	1	
⑤	Circlip	1	
⑥	Washer	1	
⑦	3rd wheel gear/collar	1/1	
⑧	Washer	1	
⑨	5th wheel gear	1	
⑩	Circlip	1	
⑪	Washer	1	
⑫	2nd wheel gear/collar	1/1	
⑬	Drive axle	1	

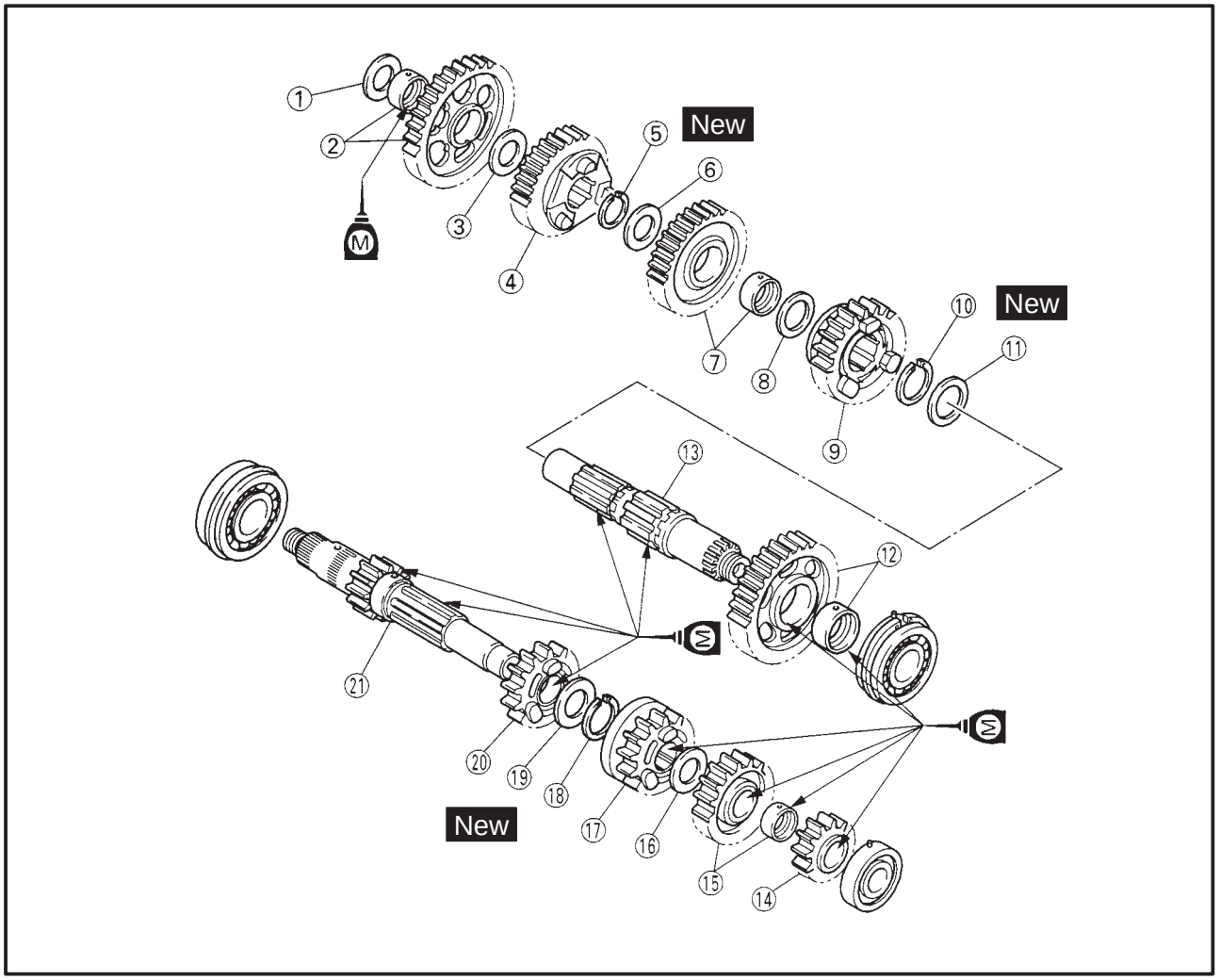

Order	Job/Part	Q'ty	Remarks
⑭	2nd pinion gear	1	
⑮	5th pinion gear/collar	1/1	
⑯	Washer	1	
⑰	3rd pinion gear	1	
⑱	Circlip	1	
⑲	Washer	1	
⑳	4th pinion gear	1	
㉑	Main axle (1st pinion gear)	1	
			For assembly, reverse the disassembly procedure.

SHIFT CAM AND SHIFT FORK

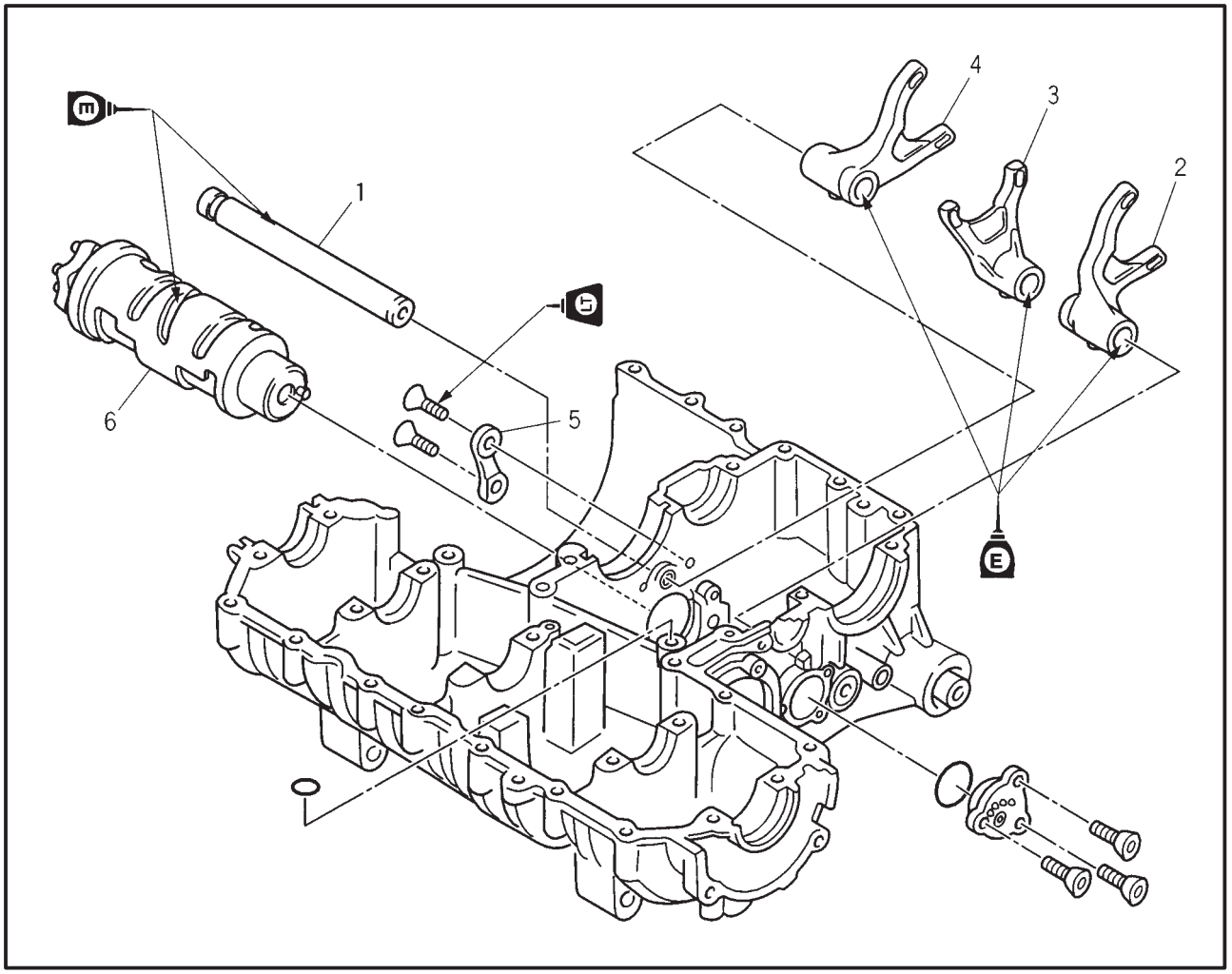

Order	Job/Part	Q'ty	Remarks
	Removing the shift cam and shift fork.		Remove the parts in the order listed. Refer to "CRANKCASE"
	Crankcase		
1	Shif fork quide bar	1	Refer to "INSTALLING THE TRANSMISSION
2	Shift fork (L)	1	
3	Shift fork (C)	1	
4	Shift fork (R)	1	
5	Stopper plate	1	
6	Shift drum	1	For installation, reverse the removal produre.

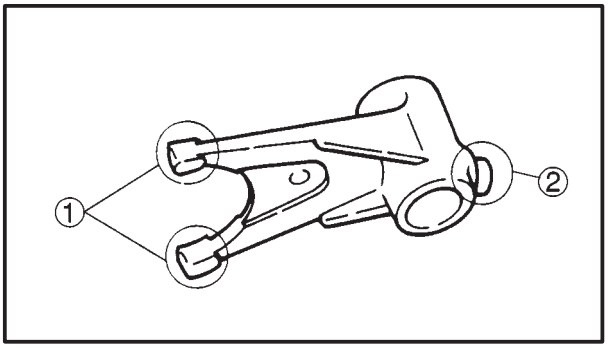

EAS00421

CHECKING THE SHIFT FORKS

The following procedure applies to all of the shift forks and related components.

1. Check:
   - shift fork cam follower ①
   - shift fork pawl ②
     Bends/damage/scoring/wear → Replace the shift fork.
2. Check:
   - shift fork guide bar
     Roll the shift fork guide bar on a flat surface.
     Bends → Replace.

⚠ WARNING

Do not attempt to straighten a bent shift fork guide bar.

3. Check:
   - shift fork movement
     (on the shift fork guide bar)
     Rough movement → Replace the shift forks and shift fork guide bar as a set.

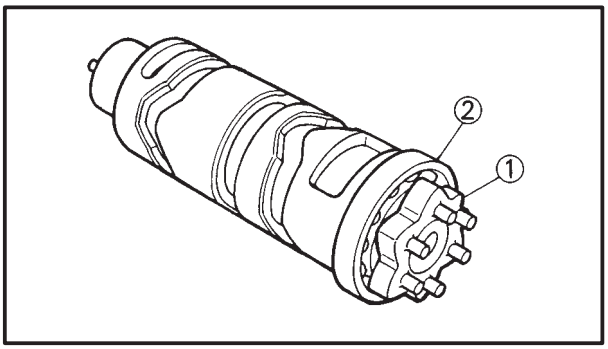

EAS00422

CHECKING THE SHIFT DRUM ASSEMBLY

1. Check:
   - shift drum grooves
     Damage/scratches/wear → Replace the shift drum.
   - shift drum segment ①
     Damage/wear → Replace.
   - shift drum bearing ②
     Damage/pitting → Replace.

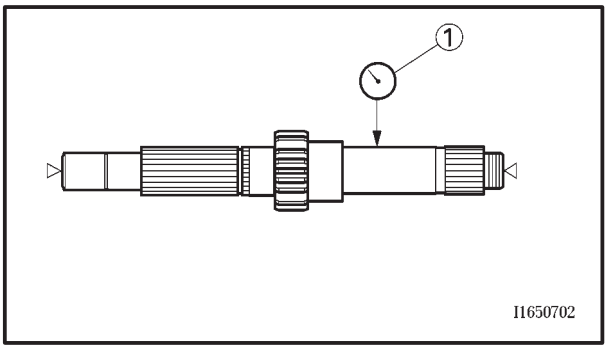

EAS00424

CHECKING THE TRANSMISSION

1. Measure:
   - main axle runout
     (with a centering device and dial gauge ①)
     Out of specification → Replace the main axle.

	Main axle runout limit **0.06 mm**

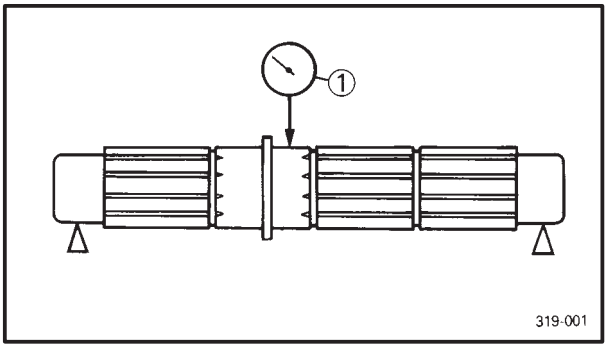

2. Measure:
   - drive axle runout
     (with a centering device and dial gauge ①)
     Out of specification → Replace the drive axle.

	Drive axle runout limit **0.06 mm**

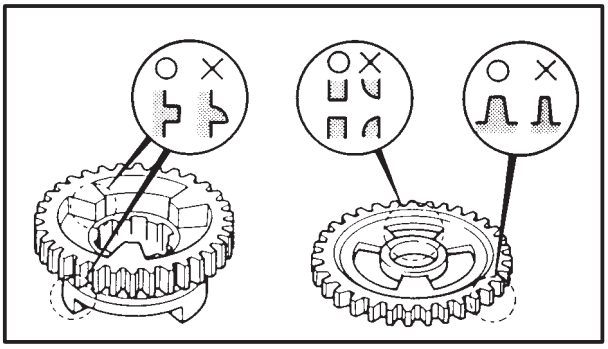

3. Check:
   - transmission gears
     Blue discoloration/pitting/wear → Replace the defective gear(-s).
   - transmission gear dogs
     Cracks/damage/rounded edges → Replace the defective gear(-s).
4. Check:
   - transmission gear engagement
     (each pinion gear to its respective wheel gear)
     Incorrect → Reassemble the transmission axle assemblies.

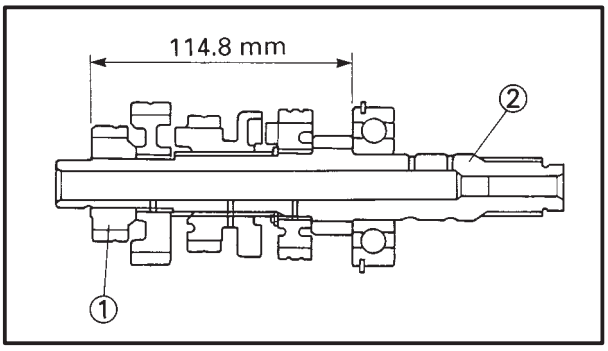

NOTE:

When reassembling the main axle, press the 2nd pinion gear ① onto it ② as shown.

5. Check:
   - transmission gear movement
     Rough movement → Replace the defective part(-s).
6. Check:
   - circlips
     Damage/bends/looseness → Replace.

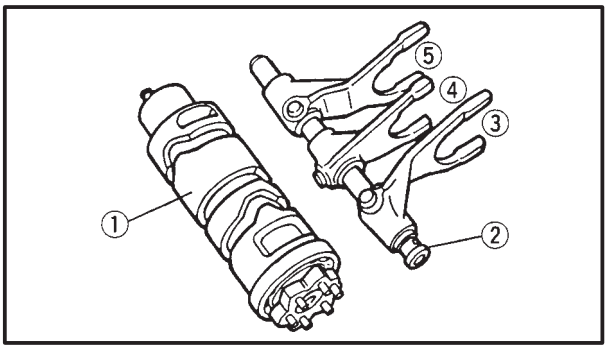

EAS00426

INSTALLING THE SHIFT FORKS AND SHIFT DRUM ASSEMBLY

1. Install:
   - shift drum aseembly ①
   - shift fork guide bars ②
   - shift fork “R” ③
   - shift fork “C” ④
   - shift fork “L” ⑤

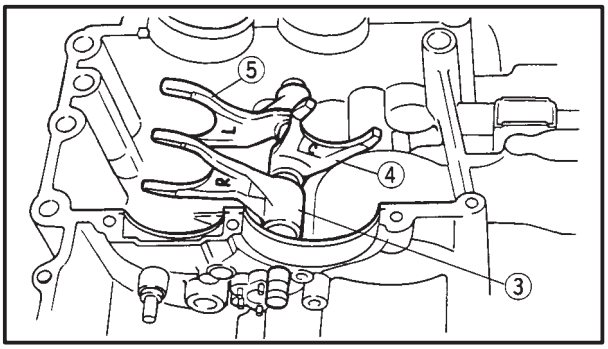

NOTE:

The embossed marks on the shift forks should face towards the right side of the engine and be in the following sequence: “R”, “C”, “L”.

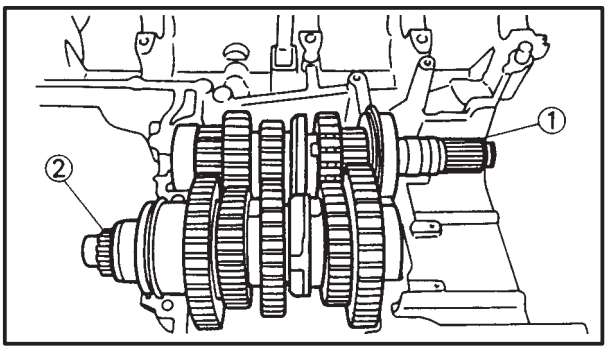

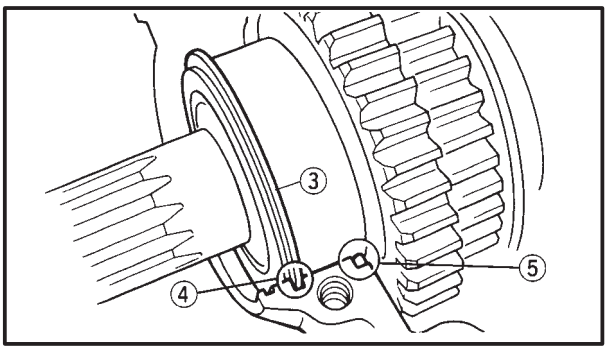

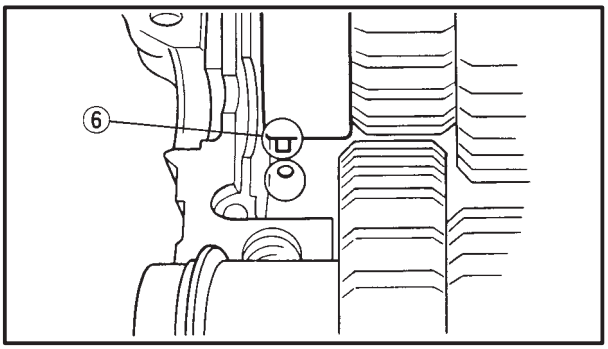

EAS00429

INSTALLING THE TRANSMISSION

1. Install:
   - main axle assembly ①
   - drive axle assembly ②

NOTE:

- Make sure that the drive axle bearing circlips ③ are inserted into the grooves ④ in the upper crankcase.
- The drive axle bearing pin ⑤ must face towards the rear of the crankcase and the main axle bearing pin ⑥ must face towards the front of the crankcase.

2. Check:
   - transmission
     Rough movement → Repair.

NOTE:

Oil each gear, shaft, and bearing thoroughly.

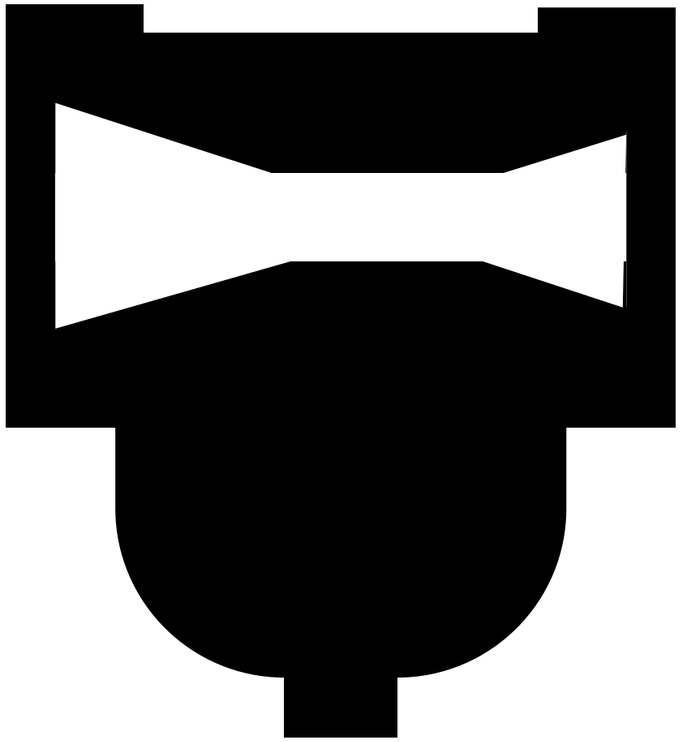

CARB 5

CHAPTER 5.
CARBURETORS

CARBURETORS 5-1
CHECKING THE CARBURETORS 5-4
ASSEMBLING THE CARBURETORS 5-5
INSTALLING THE CARBURETORS 5-7
MEASURING AND ADJUSTING THE FUEL LEVEL 5-7
CHECKING AND ADJUSTING THE THROTTLE POSITION SENSOR 5-8
CHECKING THE FUEL COCK 5-10
CHECKING THE FUEL COCK OPERATION 5-10

EAS00481

CARBURETORS

CARBURETORS

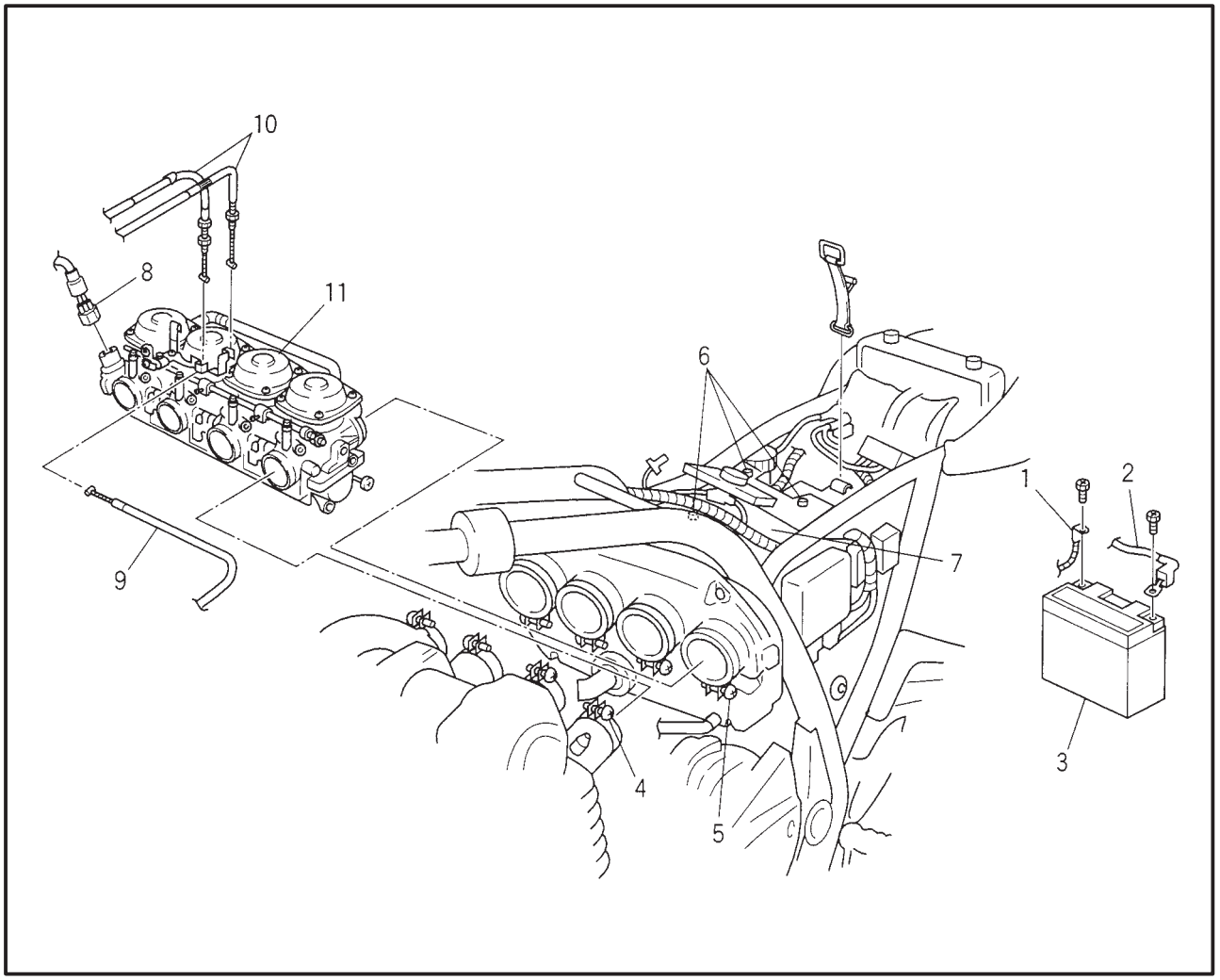

Order	Job/Part	Q'ty	Remarks
	Removing the carburetors Seat, fuel tank		Remove the parts in the order listed. Refer to "SEAT, SIDE COVER AND FUEL TANK" in Chapter 3.
1	Battery negative lead	1	
2	Battery positive lead	1	
3	Battery	1	
4	Carburetor joint screws	4	Loosen
5	Air filter joint screws	4	Loosen
6	Bolts	3	Loosen
7	Air filter case	1	Move to rear ward
8	Throttle position sensor lead	1	Disconnect
9	Starter cable	1	
10	Throttle cables	2	
11	Carburetors	1	
			For installation, reverse the removal procedure.

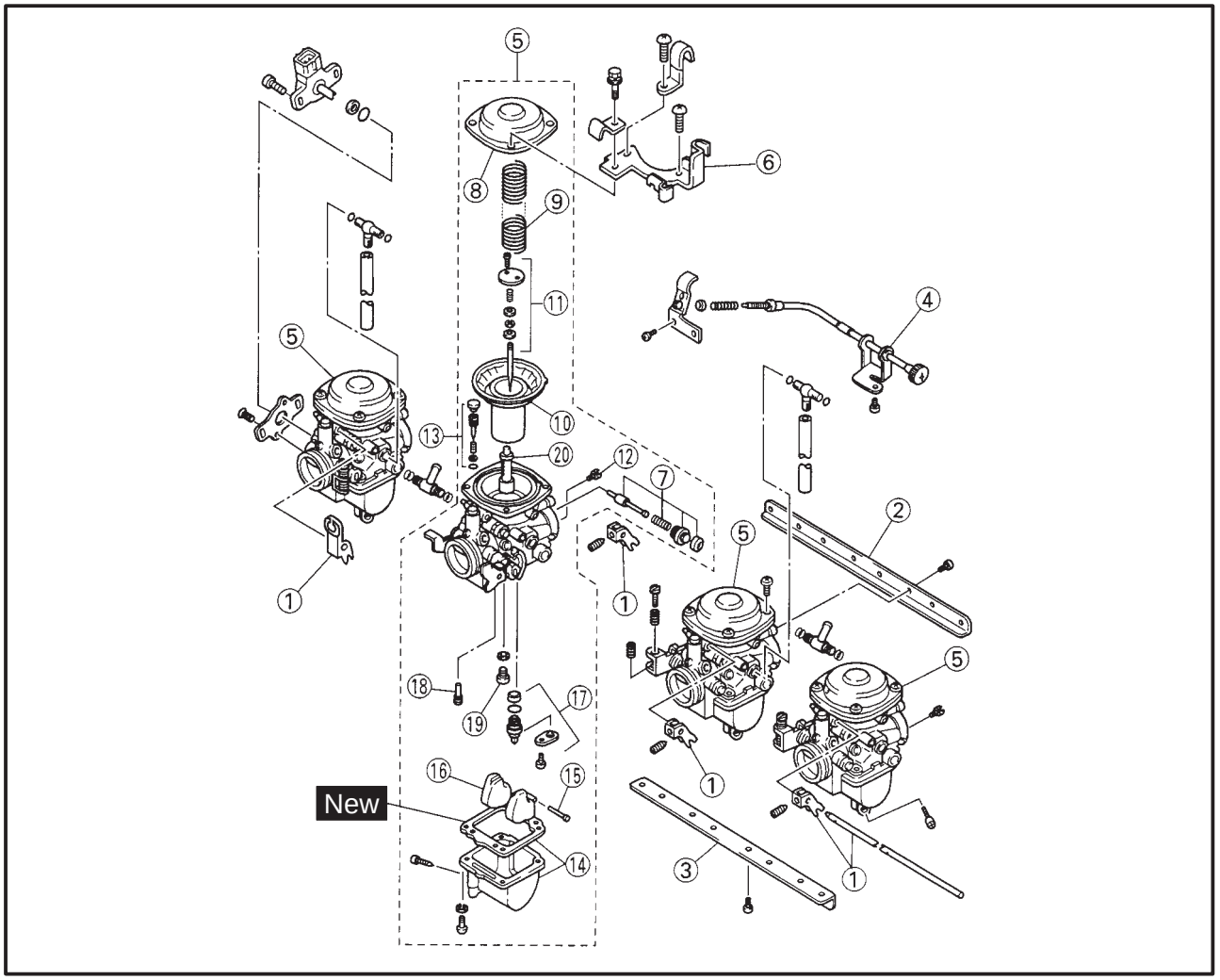

Order	Job/Part	Q'ty	Remarks
	Disassembling the carburetor		Disassembly the parts in the order listed.
①	Starter shaft/Starter levers	1/4	
②	Upper bracket	1	**NOTE:** The following procedure applies to all of the carburetors.
③	Lower bracket	1	
④	Throttle stop screw set	1	
⑤	Carburetors	4	
⑥	Throttle cable bracket	1	
⑦	Starter plunger set	1	
⑧	Vacuum chamber cover	1	Refer to "ASSEMBLING THE CARBURETORS".
⑨	Piston valve spring	1	
⑩	Piston valve	1	
⑪	Jet needle	1	
⑫	Pilot air jet	1	
⑬	Pilot screw	1	

EAS00484

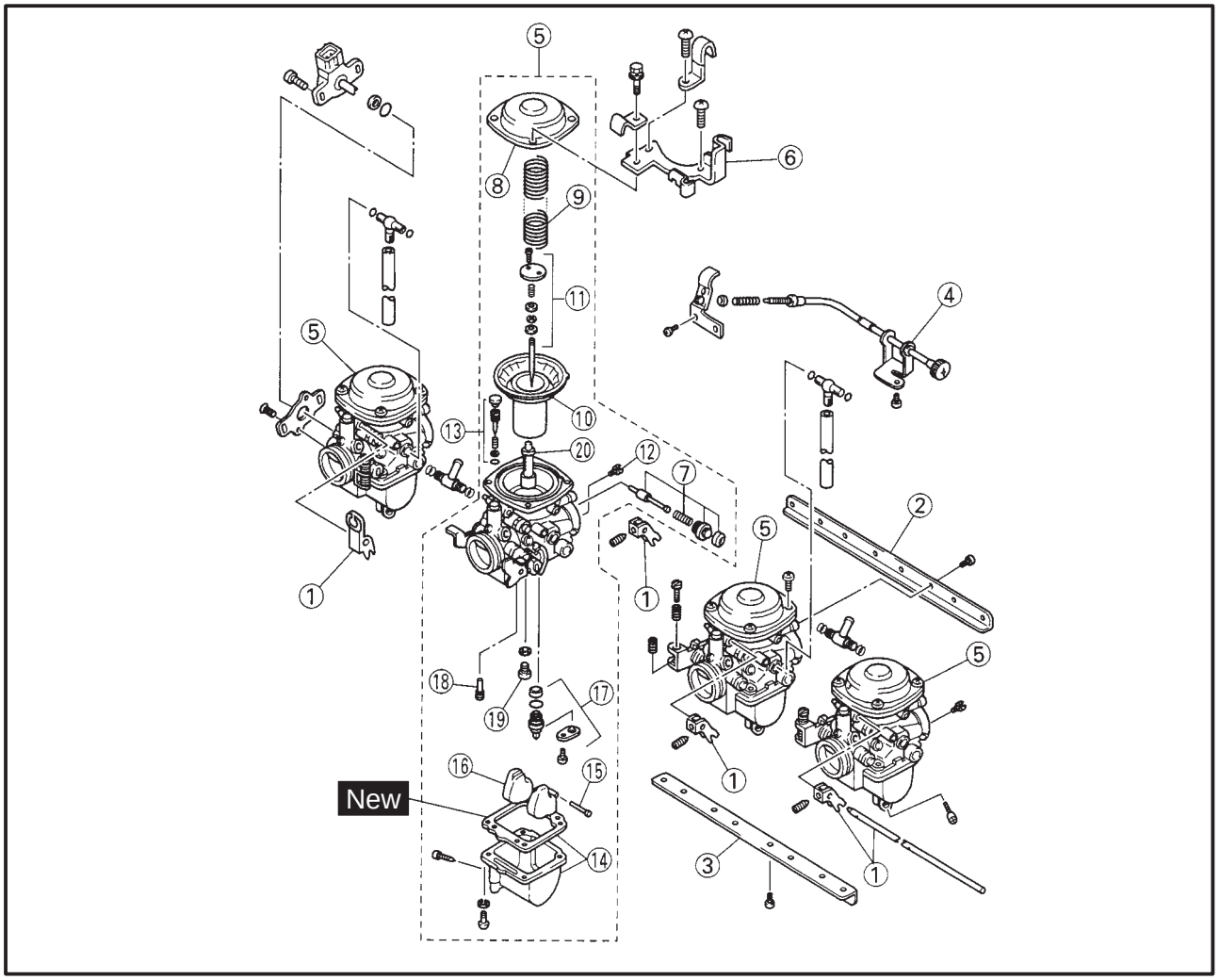

Order	Job/Part	Q'ty	Remarks
⑭	Float chamber	1/1	Refer to "ASSEMBLING THE CARBURETORS".
	Float chamber gasket		
⑮	Float pin	1	
⑯	Float	1	
⑰	Needle valve ass'y	1	
⑱	Pilot jet	1	
⑲	Main jet	1	
⑳	Needle jet	1	
			For assembly, reverse the disassembly procedure.

EAS00486

CHECKING THE CARBURETORS

The following procedure applies to all of the carburetors.

1. Check:
   - carburetor body
   - float chamber
   - jet housing

   Cracks/damage → Replace.
2. Check:
   - fuel passages

   Obstruction → Clean.

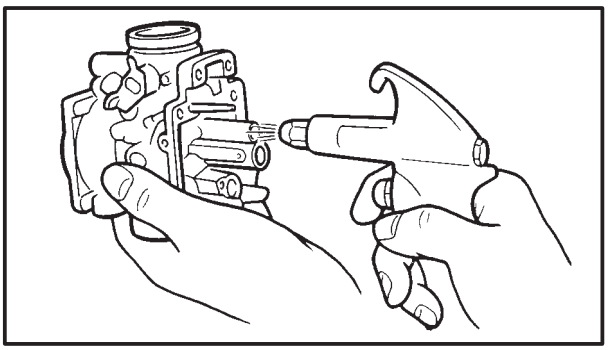

▼▼▼

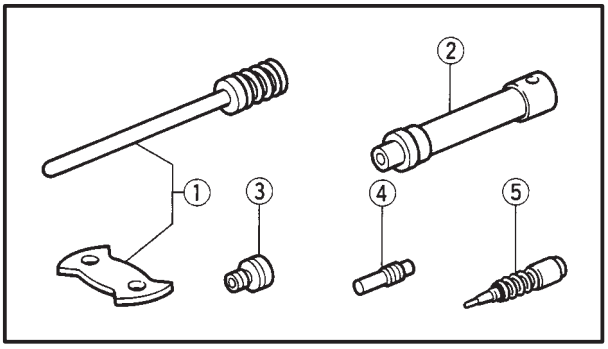

10. Check:
    - jet needle kit ①
    - needle jet ②
    - main jet ③
    - pilot jet ④
    - pilot screw ⑤

    Bends/damage/wear → Replace.
    Obstruction → Clean.
    Blow out the jets with compressed air.
11. Check:
    - piston valve movement

    Insert the piston valve into the carburetor body and move it up and down.
    Tightness → Replace the piston valve.
12. Check:
    - fuel feed pipes
    - hose joint

    Cracks/damage → Replace.
    Obstruction → Clean.
    Blow out the pipes with compressed air.
13. Check:
    - fuel feed hoses
    - fuel hoses

    Cracks/damage/wear → Replace.
    Obstruction → Clean.
    Blow out the hoses with compressed air.

EAS00489

ASSEMBLING THE CARBURETORS

The following procedure applies to both of the carburetors.

CAUTION:

- **Before assembling the carburetors, wash all of the parts in a petroleum-based solvent.**
- **Always use a new gasket.**

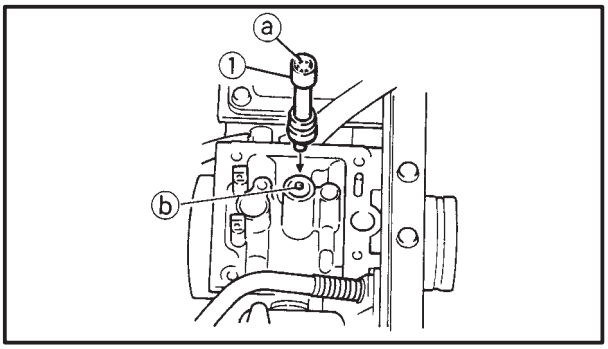

1. Install:
    - needle jet ①
    - pilot jet
    - main jet

NOTE:

Align the slot ⓐ on the needle jet with the projection ⓑ on the carburetor body.

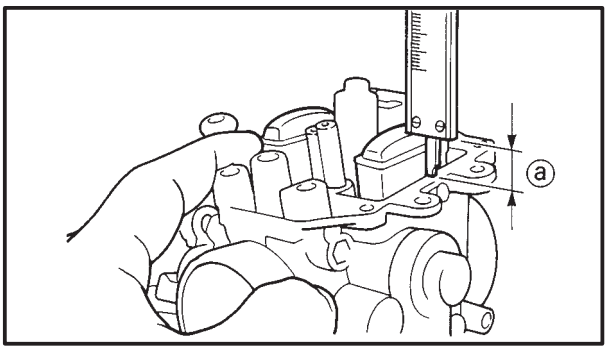

EAS00489

2. Measure:
   - float height ⓐ
     Out of specification → Adjust.

	Float height **21.3 ~ 23.3 mm**

a. Hold the carburetor upside down.
b. Measure the distance from the mating surface of the float chamber (with the gasket removed) to the top of the float.

NOTE:

The float arm should rest on the needle valve without depressing it.

c. If the float height is not within specification, inspect the needle valve seat and needle valve.
d. If either the needle valve seat or needle valve is worn, replace them both.
e. If both the needle valve seat and needle valve are fine, adjust the float height by bending the float tang ①.
f. Check the float height again.

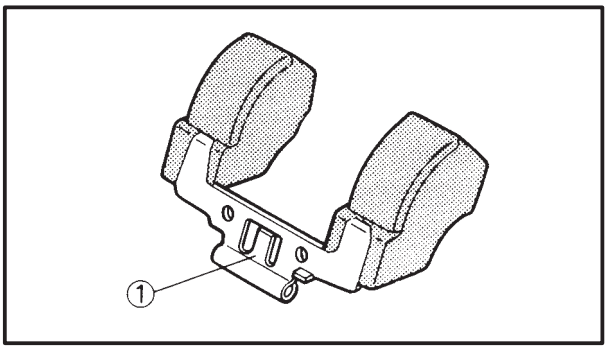

3. Install:
   - piston valve
   - piston valve spring
   - vacuum chamber cover
4. Install:
   - connecting bracket

NOTE:

After installing the connecting bracket, check that the throttle cable lever and starter plunger link operate smoothly.

EAS00493

INSTALLING THE CARBURETORS

1. Adjust:
   - carburetor synchronization
     Refer to “SYNCHRONIZING THE CARBURETORS” in chapter 3.
2. Adjust:
   - engine idling speed

	Engine idling speed **1,000 ~ 1,100 r/min**

Refer to “ADJUSTING THE ENGINE IDLING SPEED” in chapter 3.

3. Adjust:
   - throttle cable free play

	Throttle cable free play (at the flange of the throttle grip) **3 ~ 5 mm**

Refer to “ADJUSTING THE THROTTLE CABLE FREE PLAY” in chapter 3.

EAS00497

MEASURING AND ADJUSTING THE FUEL LEVEL

1. Measure:
   - fuel level ⓐ
     Out of specification → Adjust.

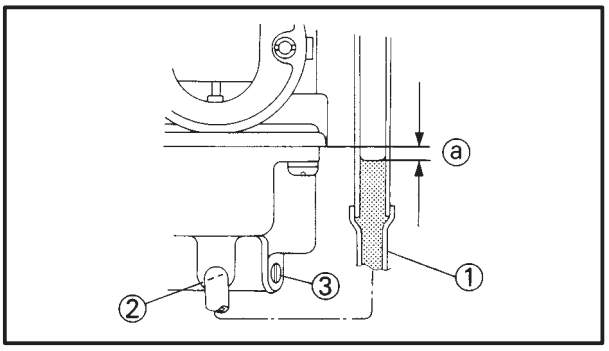

	Fuel level (below the line on the float chamber) **3.5 ~ 4.5 mm**

▼▼▼▼▼▼▼▼▼▼▼▼▼▼▼▼▼▼▼▼▼▼▼▼▼▼▼▼▼▼▼▼

a. Stand the motorcycle on a level surface.
b. Place the motorcycle on a suitable stand to ensure that the motorcycle is standing straight up.
c. Install the fuel level gauge ① to the fuel drain pipe ②.

	Fuel level gauge **90890-01312**

d. Loosen the fuel drain screw ③.
e. Hold the fuel level gauge vertically next to the line on the float chamber
f. Measure the fuel level ⓐ.

NOTE:

Fuel level readings should be equal on both sides of the carburetor assembly.

▲▲▲▲▲▲▲▲▲▲▲▲▲▲▲▲▲▲▲▲▲▲▲▲▲▲▲▲▲▲▲▲

2. Adjust:
   - fuel level

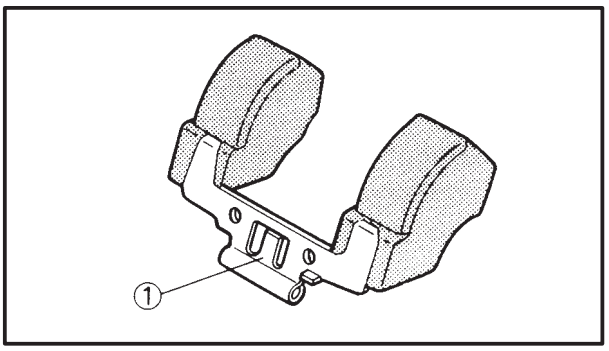

a. Remove the carburetor assembly.
b. Check the needle valve seat and needle valve.
c. If either is worn, replace them as a set.
d. If both are fine, adjust the float level by slightly bending the float tang ①.
e. Install the carburetor assembly.
f. Measure the fuel level again.
g. Repeat steps (a) to (f) until the fuel level is within specification.

EAS00500

CHECKING AND ADJUSTING THE THROTTLE POSITION SENSOR

NOTE:

- Before adjusting the throttle position sensor, the engine idling speed should be properly adjusted.
- When installing the throttle position sensor, adjust its angle according to the r/min which are displayed on the tachometer.
  Refer to the adjustment procedure below.

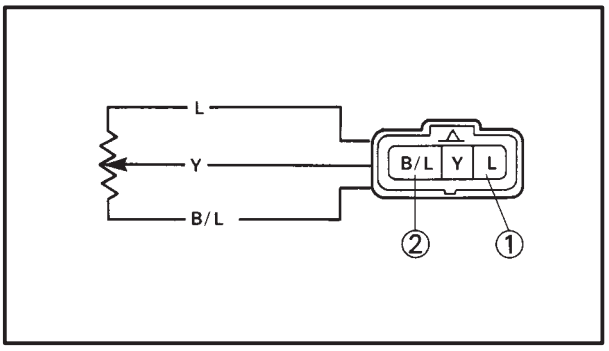

1. Check:
   - throttle position sensor

a. Disconnect the throttle position sensor coupler.
b. Remove the throttle position sensor from the carburetor.
c. Connect the pocket tester (Ω × 1k) to the throttle position sensor.

Tester positive lead → Blue terminal ①
Tester negative lead → Black/Blue terminal ②

d. Check the throttle position sensor maximum resistance.
   Out of specification → Replace the throttle position sensor.

Throttle position sensor maximum resistance
4.0 ~ 6.0 kΩ at 20°C (68°F)
(Blue – Black/Blue)

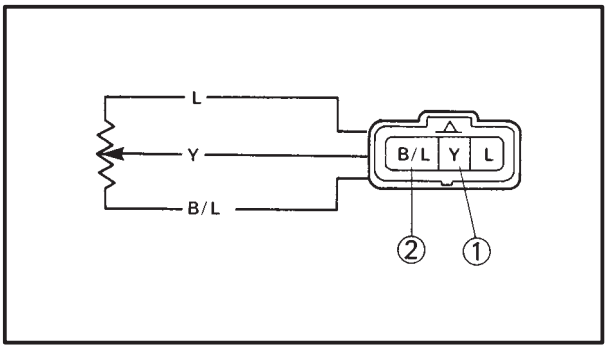

e. Install the throttle position sensor onto the carburetor.
f. Connect the pocket tester (Ω × 1k) to the throttle position sensor.

Tester positive lead → Yellow ①
Tester negative lead → Black/Blue ②

g. While slowly opening the throttle, check that the throttle position sensor resistance is within the specified range.

Out of specification → Replace the throttle position sensor.

Throttle position sensor resistance
0 to 4 ~ 6 kΩ at 20°C (68°F)
(Yellow – Black/Blue)

2. Adjust:
   - throttle position sensor angle

a. Turn the main switch to "ON".
b. Disconnect the throttle position sensor coupler.
c. Reconnect the throttle position sensor coupler.

NOTE:

After reconnecting the throttle position sensor coupler, the tachometer switches to the throttle position sensor adjustment mode.

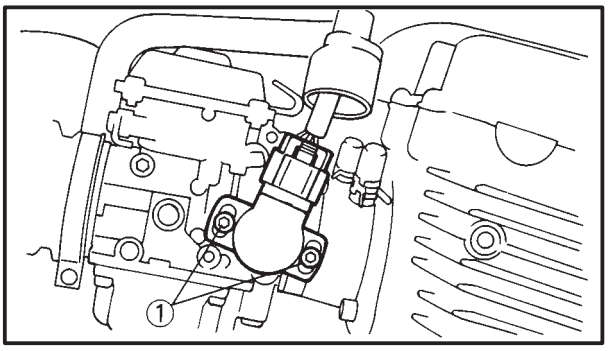

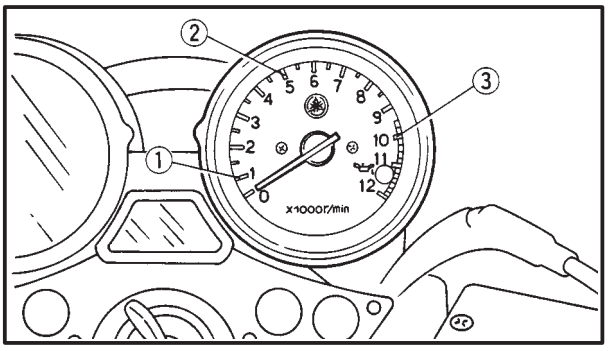

d. Loosen the throttle position sensor screws ①.
e. Adjust the throttle position sensor angle according to the following table:

NOTE:

The angle of the throttle position sensor is indicated by the r/min which are displayed on the tachometer.

Tachometer reading
Throttle position sensor angle
1,000 r/min①
Too small
5,000 r/min②
Correct
10,000 r/min③
Too large

f. After adjusting the throttle position sensor angle, tighten the throttle position sensor screws.

NOTE:

To exit the throttle position sensor adjustment mode, start the engine or turn the main switch to "OFF".

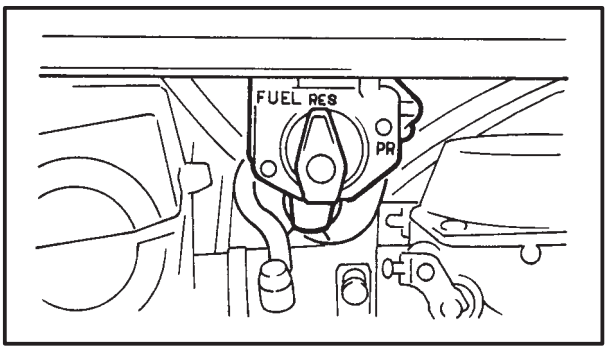

EAS00505

CHECKING THE FUEL COCK

1. Check:
   - fuel cock
     Cracks/damage/wear → Replace.

EAS00506

CHECKING THE FUEL COCK OPERATION

NOTE:

After installing the fuel cock, check its operation.

1. Check that the fuel cock lever is positioned to "ON" or "R".
2. Place a container under the end of the fuel hose.
3. Check:
   - fuel cock operation

▼▼▼▼▼▼▼▼▼▼▼▼▼▼▼▼▼▼▼▼▼▼▼▼▼▼▼▼▼▼▼▼

a. Suck on the end of the vacuum hose.

Fuel flows → Fuel cock is OK
Fuel does not flows → Replace the fuel cock.

▲▲▲▲▲▲▲▲▲▲▲▲▲▲▲▲▲▲▲▲▲▲▲▲▲▲▲▲▲▲▲▲

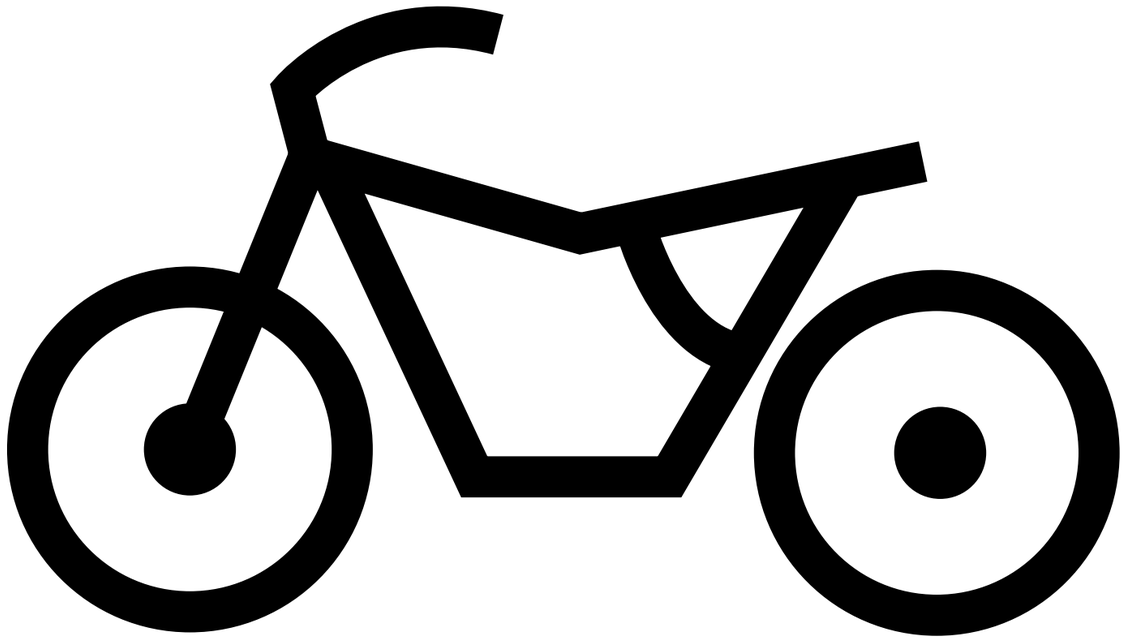

CHAS 6

CHAPTER 6.
CHASSIS

FRONT WHEEL AND BRAKE DISCS 6-1
REMOVING THE FRONT WHEEL 6-3
CHECKING THE FRONT WHEEL 6-3
CHECKING THE BRAKE DISCS 6-4
INSTALLING THE FRONT WHEEL 6-6
ADJUSTING THE FRONT WHEEL STATIC BALANCE 6-7

REAR WHEEL, BRAKE DISC AND REAR WHEEL SPROCKET 6-9
REAR WHEEL 6-9
BRAKE DISC AND REAR WHEEL SPROCKET 6-10
REMOVING THE REAR WHEEL 6-11
CHECKING THE REAR WHEEL 6-11
CHECKING THE REAR WHEEL DRIVE HUB 6-12
CHECKING AND REPLACING THE REAR WHEEL SPROCKET . 6-12
INSTALLING THE REAR WHEEL 6-13
ADJUSTING THE REAR WHEEL STATIC BALANCE 6-13

FRONT AND REAR BRAKES 6-14
FRONT BRAKE PADS 6-14
REAR BRAKE PADS 6-15
REPLACING THE FRONT BRAKE PADS 6-16
REPLACING THE REAR BRAKE PADS 6-18
FRONT BRAKE MASTER CYLINDER 6-20
REAR BRAKE MASTER CYLINDER 6-22
DISASSEMBLING THE FRONT BRAKE MASTER CYLINDER 6-24
DISASSEMBLING THE REAR BRAKE MASTER CYLINDER 6-24
CHECKING THE FRONT AND REAR BRAKE MASTER CYLINDERS 6-25
ASSEMBLING AND INSTALLING THE FRONT BRAKE MASTER CYLINDERS 6-26
ASSEMBLING THE REAR BRAKE MASTER CYLINDER 6-28
FRONT BRAKE CALIPER 6-30
REAR BRAKE CALIPER 6-32
DISASSEMBLING THE FRONT BRAKE CALIPERS 6-34
DISASSEMBLING THE REAR BRAKE CALIPER 6-35
CHECKING THE FRONT AND REAR BRAKE CALIPERS 6-36
ASSEMBLING AND INSTALLING THE FRONT BRAKE CALIPERS 6-36
ASSEMBLING AND INSTALLING THE REAR BRAKE CALIPER . . 6-39

FRONT FORK 6-41
REMOVING THE FRONT FORK LEGS 6-44
DISASSEMBLING THE FRONT FORK LEGS 6-44
CHECKING THE FRONT FORK LEGS 6-46
ASSEMBLING THE FRONT FORK LEGS 6-47
INSTALLING THE FRONT FORK LEGS 6-50

HANDLEBAR 6-51
REMOVING THE HANDLEBAR 6-53
CHECKING THE HANDLEBAR 6-53
INSTALLING THE HANDLEBAR 6-54

STEERING HEAD 6-57
LOWER BRACKET 6-57
REMOVING THE LOWER BRACKET 6-59
CHECKING THE STEERING HEAD 6-59
INSTALLING THE STEERING HEAD 6-60

REAR SHOCK ABSORBER, SWINGARM AND DRIVE CHAIN 6-61
HANDLING THE REAR SHOCK ABSORBER AND GAS CYLINDER 6-63
DISPOSING OF A REAR SHOCK ABSORBER AND GAS CYLINDER 6-63
REMOVING THE SWINGARM 6-64
CHECKING THE REAR SHOCK ABSORBER ASSEMBLY AND GAS CYLINDER 6-65
CHECKING THE SWINGARM 6-65
CHECKING THE DRIVE CHAIN 6-66

EAS00514

CHASSIS
FRONT WHEEL AND BRAKE DISCS

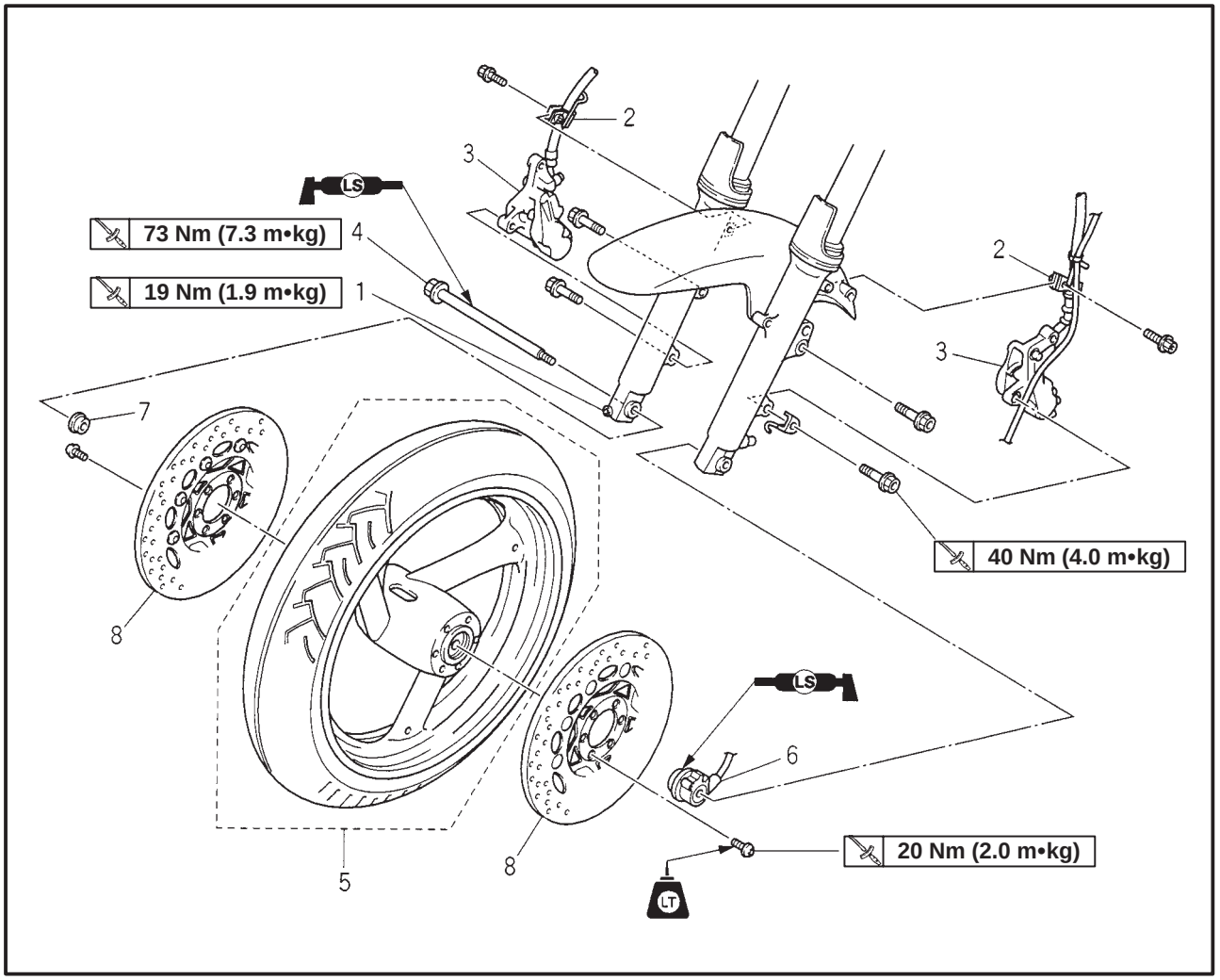

Order	Job/Part	Q'ty	Remarks
	Removing the front wheel and brake discs		Remove the parts in the order listed. **NOTE:** Place the motorcycle on a suitable stand so that the front wheel is elevated.
1	Wheel axle pinch bolt	1	
2	Brake hose holder (left/right)	1/1	
3	Caliper (left/right)	1/1	Refer to "REMOVING/INSTALLING THE FRONT WHEEL".
4	Wheel axle	1	
5	Front wheel	1	
6	Speedometer gear unit	1	
7	Collar	1	
8	Brake disc (left/right)	1/1	For installation, reverse the removal procedure.

EAS00518

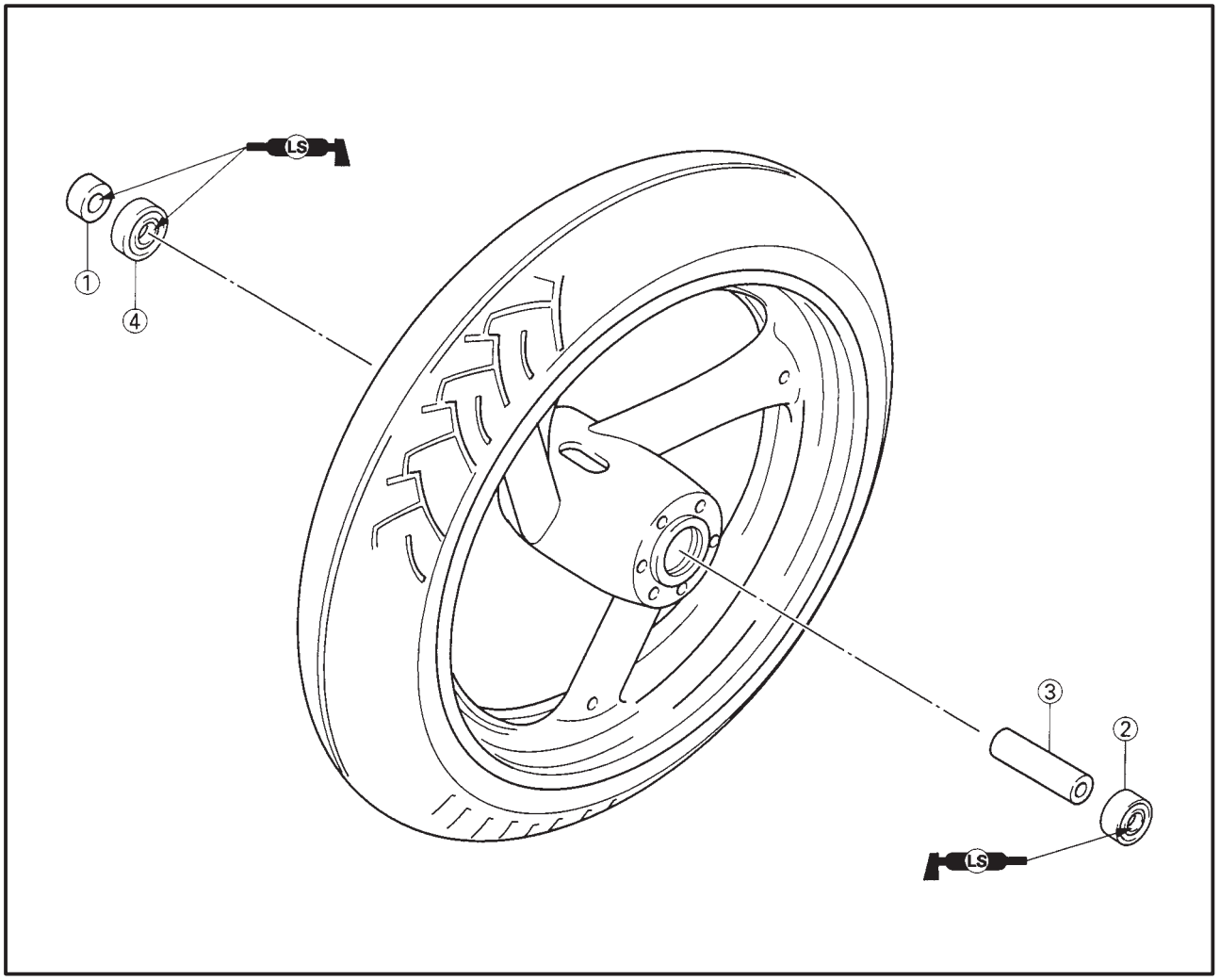

Order	Job/Part	Q'ty	Remarks
	Disassembling the front wheel.		Disassembly the parts in the order listed.
①	Oil seal	1	
②	Bearing	1	
③	Spacer	1	
④	Bearing	1	
			For assembly, reverse the disassembly procedure.

EAS00521

REMOVING THE FRONT WHEEL

1. Stand the motorcycle on a level surface.

WARNING

Securely support the motorcycle so that there is no danger of it falling over.

NOTE:

Place the motorcycle on a suitable stand so that the front wheel is elevated.

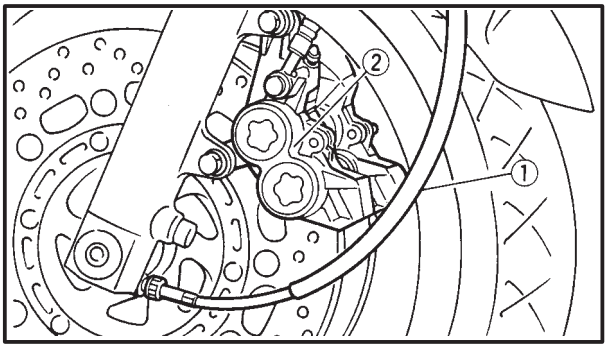

2. disconnect:
   - speedometer cable ①
3. Remove:
   - brake calipers ② (left and right)

NOTE:

Do not squeeze the brake lever when removing the brake calipers.

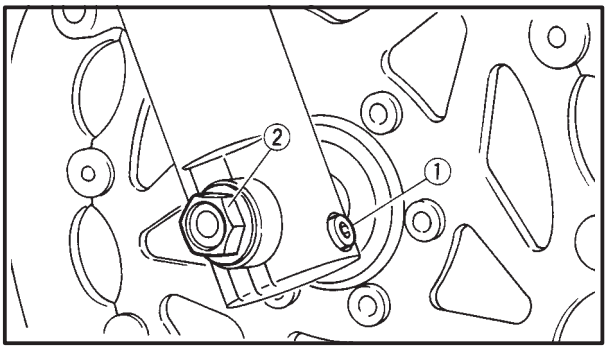

4. Loosen:
   - pinch bolt (front wheel axle) ①
   - front wheel axle ②
5. Elevate:
   - front wheel

NOTE:

Place the motorcycle on a suitable stand so that the front wheel is elevated.

EAS00525

CHECKING THE FRONT WHEEL

1. Check:
   - wheel axle
     Roll the wheel axle on a flat surface.
     Bends → Replace.

WARNING

Do not attempt to straighten a bent wheel axle.

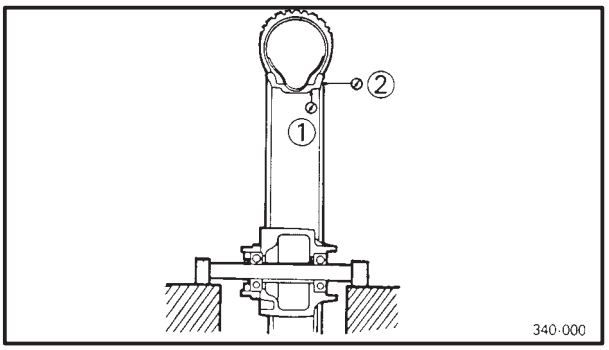

2. Check:
   - tire
   - front wheel
     Damage/wear → Replace.
     Refer to “CHECKING THE TIRES” and “CHECKING THE WHEELS” in chapter 3.
3. Measure:
   - front wheel radial runout ①
   - front wheel lateral runout ②
     Over the specified limits → Replace.

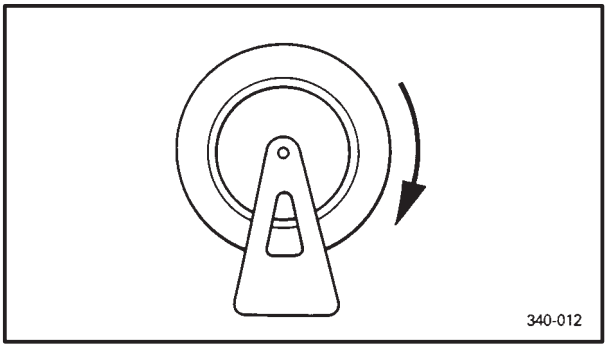

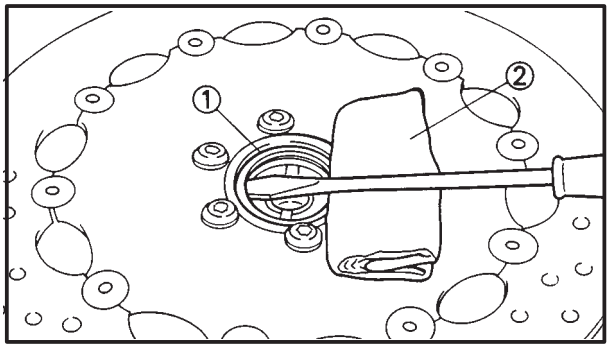

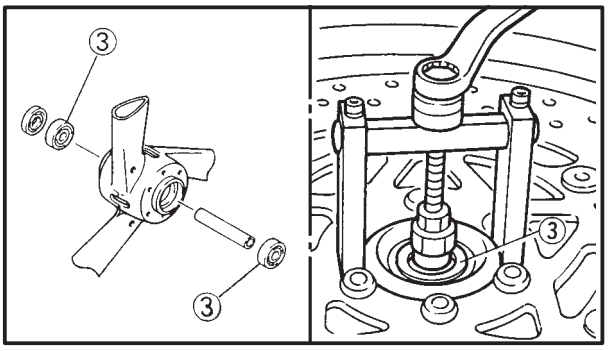

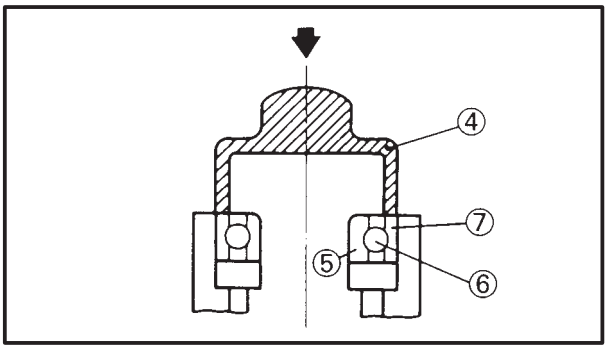

Front wheel radial runout limit
1.0 mm
Front wheel lateral runout limit
0.5 mm

4. Check:
   - wheel bearings
     Front wheel turns roughly or is loose → Replace the wheel bearings.
   - oil seals
     Damage/wear → Replace.
5. Replace:
   - wheel bearings (New)
   - oil seals (New)

▼▼▼

Brake disc deflection limit (maximum)
Front: 0.2 mm
Rear: 0.15 mm

a. Place the motorcycle on a suitable stand so that the wheel is elevated.
b. Before measuring the front brake disc deflection, turn the handlebar to the left or right to ensure that the front wheel is stationary.
c. Remove the brake caliper.
d. Hold the dial gauge at a right angle against the brake disc surface.
e. Measure the deflection 2 ~ 3 mm below the edge of the brake disc.

3. Measure:
   • brake disc thickness
   Measure the brake disc thickness at a few different locations.
   Out of specification → Replace.

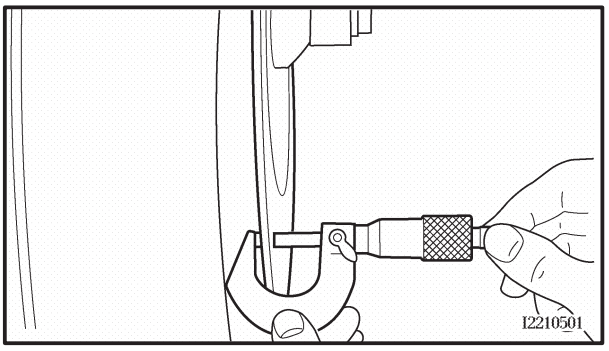

Brake disc thickness limit (minimum)
Front: 4.5 mm
Rear: 4.5 mm

4. Adjust:
   • brake disc deflection

a. Remove the brake disc.
b. Rotate the brake disc by one bolt hole.
c. Install the brake disc.

NOTE:
Tighten the brake disc bolts in stages and in a crisscross pattern.

Brake disc bolt
20 Nm (2.0 m•kg)
LOCTITE®

d. Measure the brake disc deflection.
e. If out of specification, repeat the adjustment steps until the brake disc deflection is within specification.
f. If the brake disc deflection cannot be brought within specification, replace the brake disc.

EAS00544

INSTALLING THE FRONT WHEEL

The following procedure applies to both brake discs.

1. Lubricate:
   - wheel axle
   - oil seal lips

	Recommended lubricant **Lithium soap base grease**

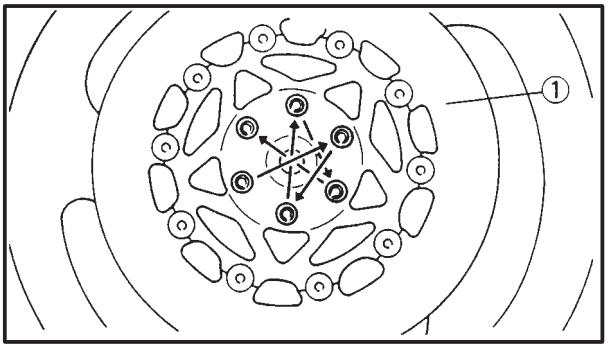

2. Install:
   - brake disc ①

NOTE:

- Apply LOCTITE® 648 to the threads of the brake disc bolts.
- Tighten the brake disc bolts in stages and in a crisscross pattern.

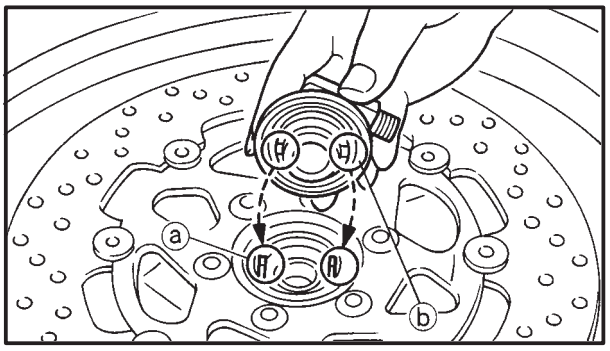

3. Install:
   - speedometer gear unit

NOTE:

Make sure that the speedometer gear unit and the wheel hub are installed with the two projections ⓐ meshed into the two slots ⓑ respectively.

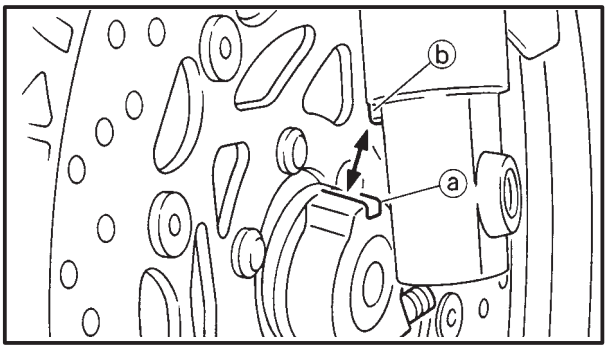

4. Install:
   - front wheel

NOTE:

Make sure that the slot ⓐ in the speedometer gear unit fits over the stopper ⓑ on the outer tube.

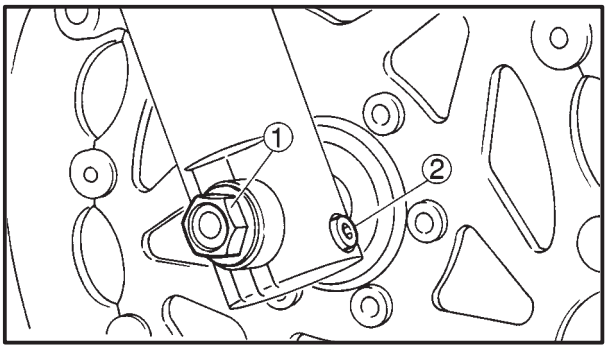

5. Tighten:
   - wheel axle ①
   - wheel axle pinch bolt ②

	Wheel axle **73 Nm (7.3 m•kg)** **Wheel axle pinch bolt** **19 Nm (1.9 m•kg)**

CAUTION:

Before tightening the wheel axle nut, push down hard on the handlebar several times and check if the front fork rebounds smoothly.

6. Install:
   - brake caliper

	Brake caliper bolt **40 Nm (4.0 m•kg)**

WARNING

Make sure that the brake hose is routed properly.

EAS00549

ADJUSTING THE FRONT WHEEL STATIC BALANCE

NOTE:

- After replacing the tire, wheel or both, the front wheel static balance should be adjusted.
- Adjust the front wheel static balance with the brake discs installed.

1. Remove:
   - balancing weight(-s)

NOTE:

Place the front wheel on a suitable balancing stand.

2. Find:
   - front wheel's heavy spot

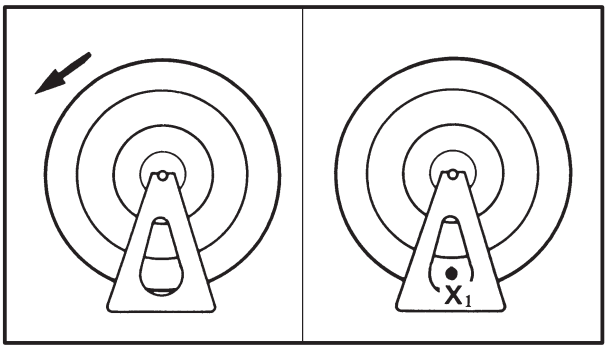

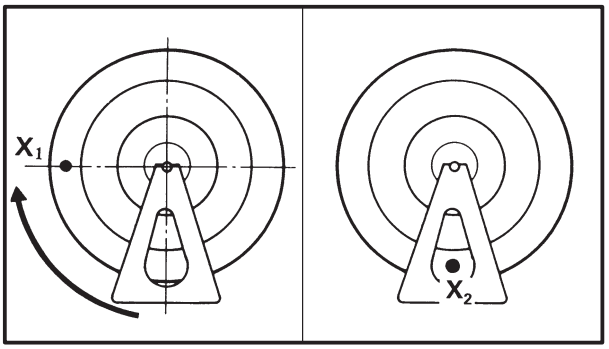

a. Spin the front wheel.
b. When the front wheel stops, put an "X_1" mark at the bottom of the wheel.
c. Turn the front wheel 90° so that the "X_1" mark is positioned as shown.
d. Release the front wheel.
e. When the wheel stops, put an "X_2" mark at the bottom of the wheel.
f. Repeat steps (b) through (d) several times until all the marks come to rest at the same spot.
g. The spot where all the marks come to rest is the front wheel's heavy spot "X".

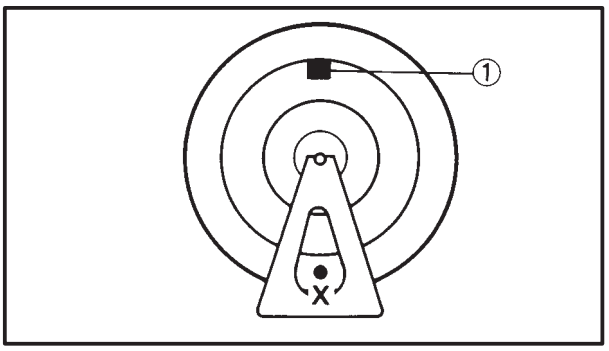

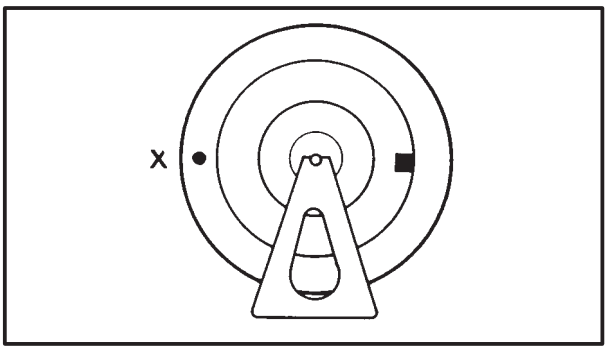

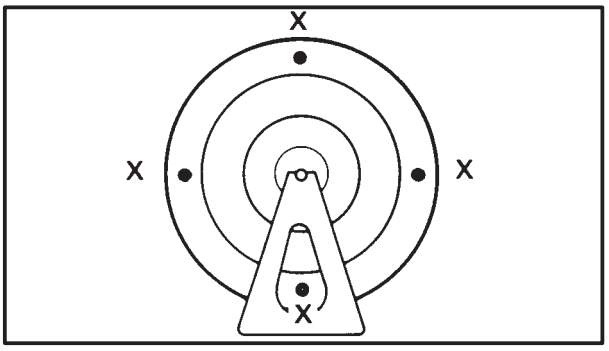

3. Adjust:
   - front wheel static balance

▼▼▼▼▼▼▼▼▼▼▼▼▼▼▼▼▼▼▼▼▼▼▼▼▼▼▼▼▼▼▼▼▼▼

a. Install a balancing weight ① onto the rim exactly opposite the heavy spot “X”.

NOTE:

Start with the lightest weight.

b. Turn the front wheel 90° so that the heavy spot is positioned as shown.
c. If the heavy spot does not stay in that position, install a heavier weight.
d. Repeat steps (b) and (c) until the front wheel is balanced.

▲▲▲▲▲▲▲▲▲▲▲▲▲▲▲▲▲▲▲▲▲▲▲▲▲▲▲▲▲▲▲▲▲▲

4. Check:
   - front wheel static balance

▼▼▼▼▼▼▼▼▼▼▼▼▼▼▼▼▼▼▼▼▼▼▼▼▼▼▼▼▼▼▼▼▼▼

a. Turn the front wheel and make sure that it stays at each position shown.
b. If the front wheel does not remain stationary at all of the positions, rebalance it.

▲▲▲▲▲▲▲▲▲▲▲▲▲▲▲▲▲▲▲▲▲▲▲▲▲▲▲▲▲▲▲▲▲▲

EAS00550

REAR WHEEL, BRAKE DISC AND REAR WHEEL SPROCKET

REAR WHEEL

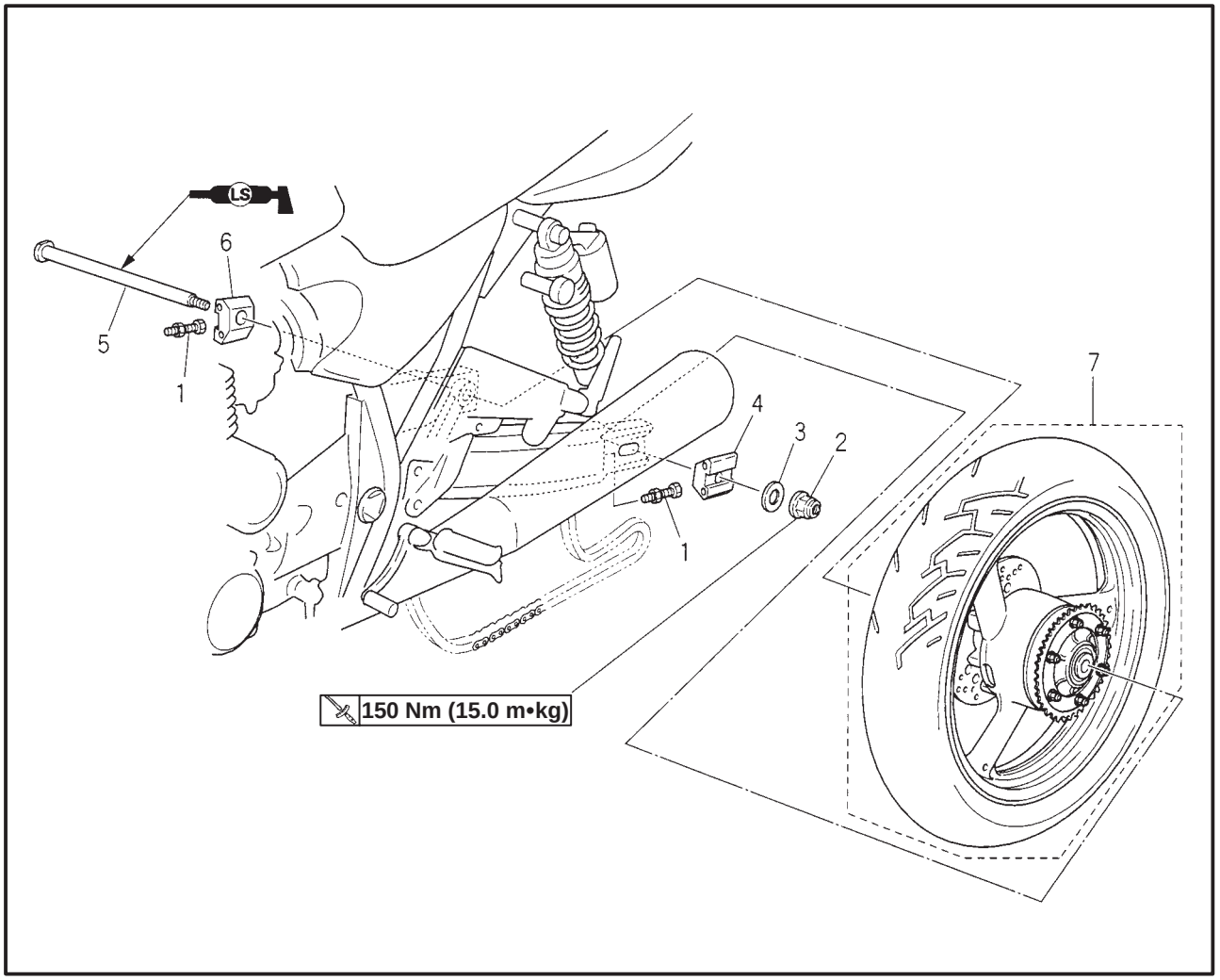

Order	Job/Part	Q'ty	Remarks
	Removing the rear wheel		Remove the parts in the order listed. **NOTE:** Place the motorcycle on a suitable stand so that the rear wheel is elevated.
1	Chain adjusters	2	
2	Rear wheel axle nut	1	Refer to "REMOVING/INSTALLING THE REAR WHEEL".
3	Plate washer	1	
4	Chain puller (left)	1	
5	Wheel axle	1	
6	Chain Puller (right)	1	
7	Rear wheel	1	For installation, reverse the removal procedure.

BRAKE DISC AND REAR WHEEL SPROCKET

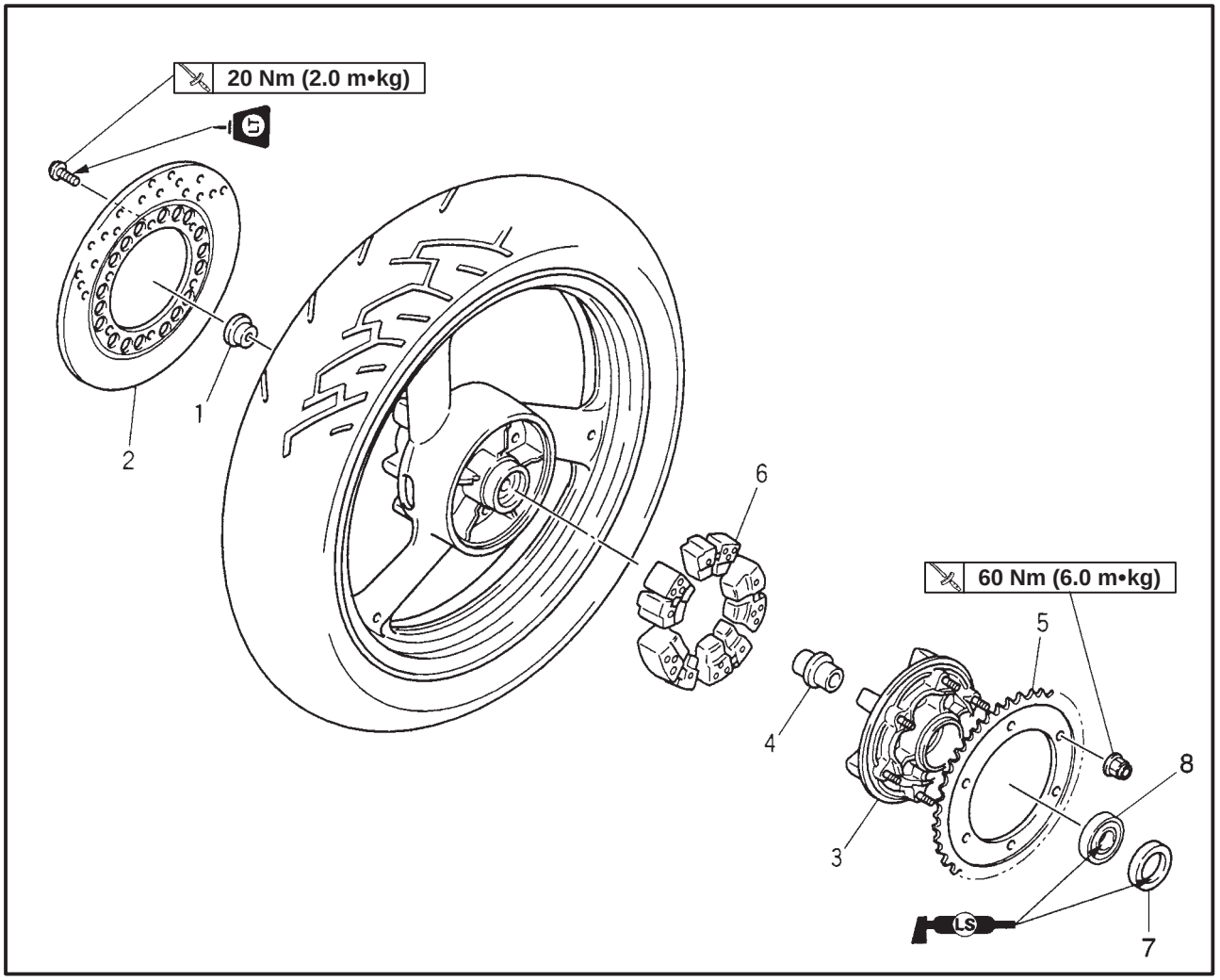

Order	Job/Part	Q'ty	Remarks
	Removing the brake disc and rear wheel sprocket		Remove the parts in the order listed.
1	Collar	1	
2	Brake disc	1	
3	Clutch hub	1	
4	Collar	1	
5	Rear wheel sprocket	1	
6	Clutch dampers	5	
7	Oil seal	1	
8	Bearing	1	
			For installation, the removal procedure.

EAS00561

REMOVING THE REAR WHEEL

1. Stand the motorcycle on a level surface.

WARNING

Securely support the motorcycle so that there is no danger of it falling over.

NOTE:

Place the motorcycle on a suitable stand so that the rear wheel is elevated.

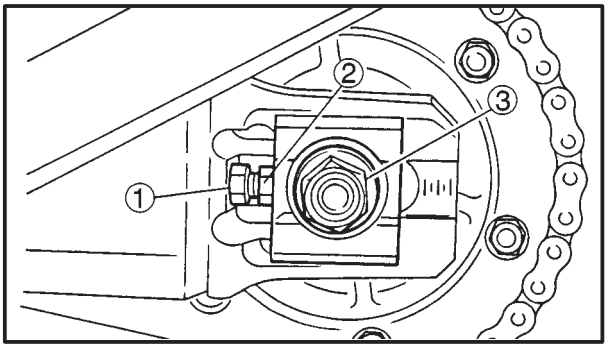

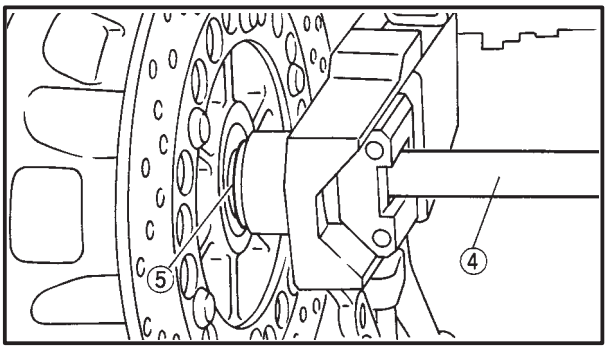

2. Loosen:
   - adjusting bolt ①
   - locknut ②
3. Remove:
   - wheel axle nut ③
   - wheel axle ④
   - rear wheel
   - right collar ⑤

NOTE:

Push the rear wheel forward and remove the drive chain from the rear wheel sprocket.

EAS00565

CHECKING THE REAR WHEEL

1. Check:
   - wheel axle
   - rear wheel
   - wheel bearings
   - oil seals

   Refer to “FRONT WHEEL”.
2. Check:
   - tire
   - rear wheel

   Damage/wear → Replace.
   Refer to “INSPECTING THE TIRES” and “INSPECTING THE WHEELS” in chapter 3.
3. Measure:
   - rear wheel radial runout
   - rear wheel lateral runout

   Refer to “FRONT WHEEL”.

EAS00567

CHECKING THE REAR WHEEL DRIVE HUB

1. Check:
   - rear wheel drive hub
     Cracks/damage → Replace.
   - rear wheel dive hub dampers
     Damage/wear → Replace.

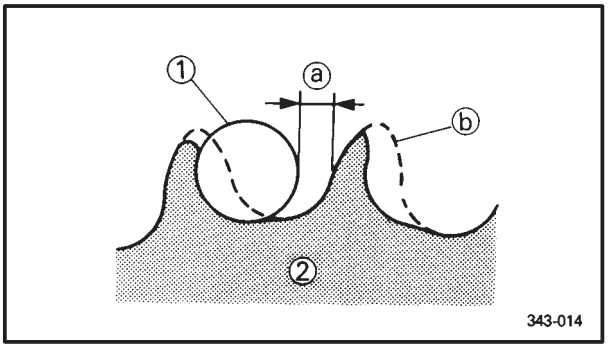

EAS00568

CHECKING AND REPLACING THE REAR WHEEL SPROCKET

1. Check:
   - rear wheel sprocket
     More than 1/4 tooth ⓐ wear → Replace the rear wheel sprocket.
     Bent teeth → Replace the rear wheel sprocket.

ⓑ Correct
① Drive chain roller
② Rear wheel sprocket

2. Replace:
   - rear wheel sprocket

▼▼▼▼▼▼▼▼▼▼▼▼▼▼▼▼▼▼▼▼▼▼▼▼▼▼▼▼▼▼▼▼

a. Remove the self-locking nuts and the rear wheel sprocket.
b. Clean the rear wheel drive hub with a clean cloth, especially the surfaces that contact the sprocket.
c. Install the new rear wheel sprocket.

Rear wheel sprocket self-locking nut
60 Nm (6.0 m•kg)

NOTE:

Tighten the self-locking nuts in stages and in a crisscross pattern.

▲▲▲▲▲▲▲▲▲▲▲▲▲▲▲▲▲▲▲▲▲▲▲▲▲▲▲▲▲▲▲▲

EAS00572

INSTALLING THE REAR WHEEL

1. Lubricate:
   - wheel axle
   - wheel bearings
   - oil seal lips

	Recommended lubricant **Lithium soap base grease**

2. Tighten:
   - wheel axle nut

	Wheel axle nut **150 Nm (15.0 m•kg)**

EAS00575

ADJUSTING THE REAR WHEEL STATIC BALANCE

NOTE:

- After replacing the tire, wheel or both, the rear wheel static balance should be adjusted.
- Adjust the rear wheel static balance with the brake disc and rear wheel drive hub installed.

1. Adjust:
   - rear wheel static balance
     Refer to “FRONT WHEEL”.

EAS00577

FRONT AND REAR BRAKES

FRONT BRAKE PADS

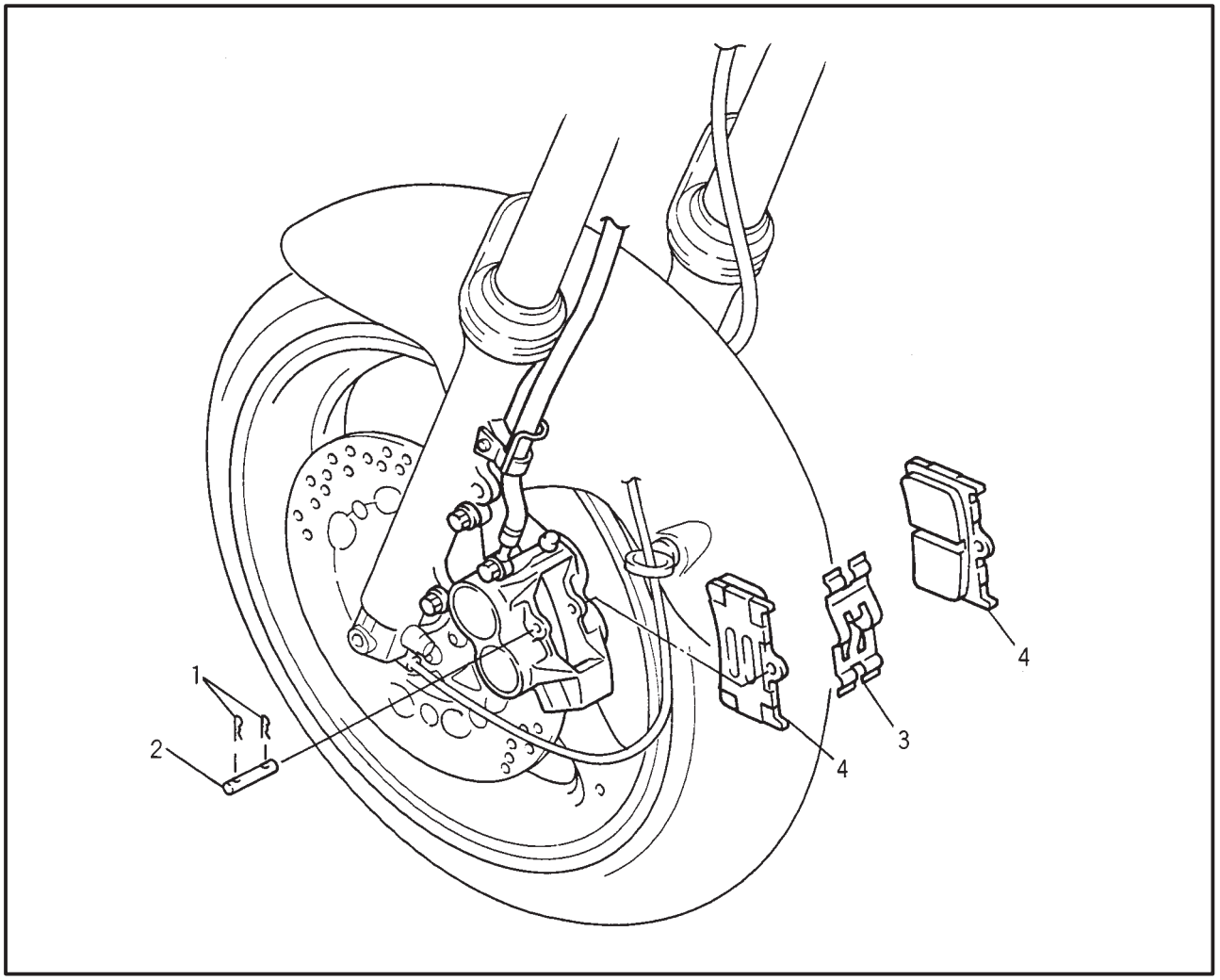

Order	Job/Part	Q'ty	Remarks
	Removing the front brake pads		Remove the parts in the order listed.
1	Clip	4	Refer to "REPLACING THE FRONT BRAKE PADS".
2	Pad pin	2	
3	Pad support	2	
4	Brake pad	4	
			For installation, reverse the removal procedure.

EAS00578

REAR BRAKE PADS

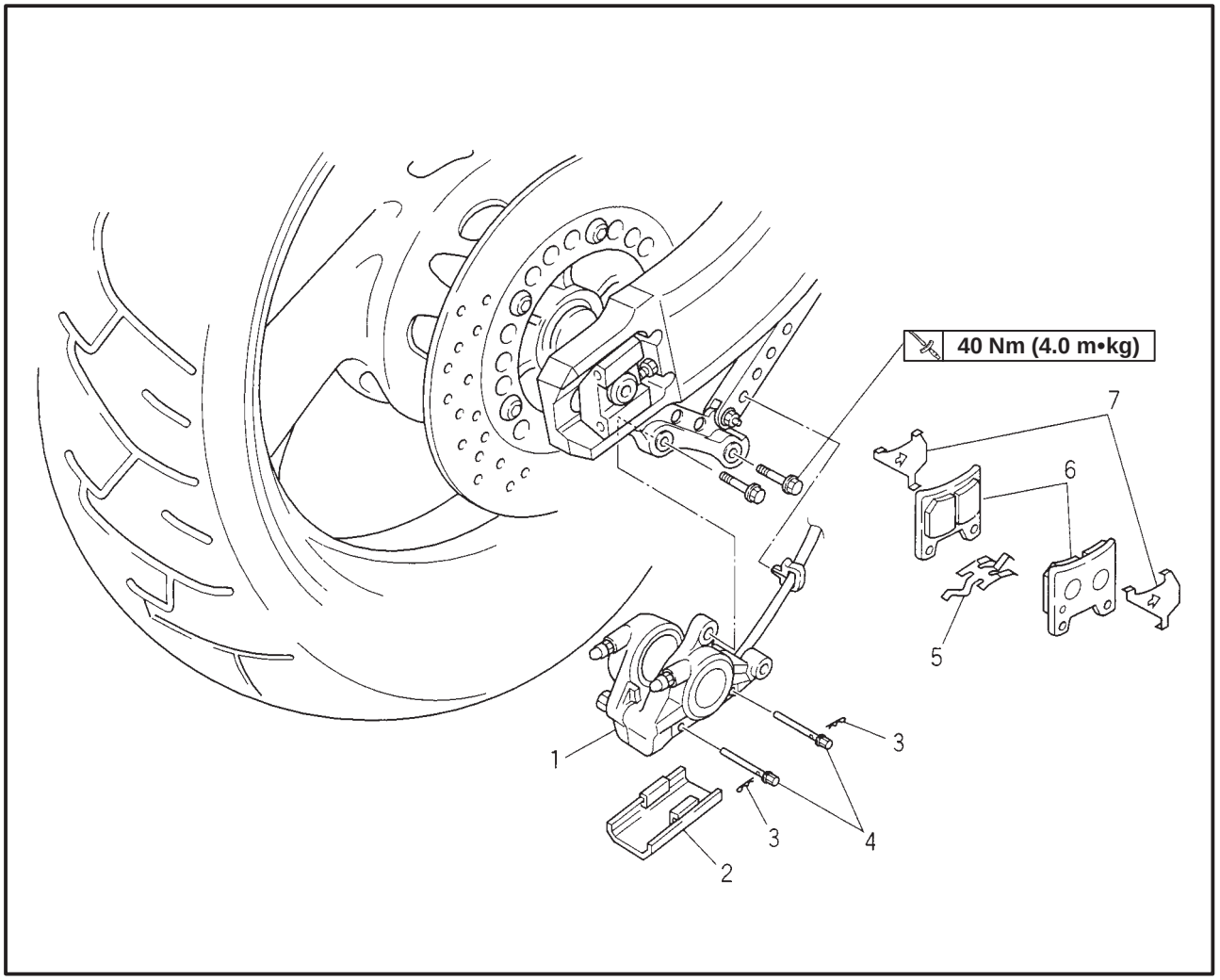

Order	Job/Part	Q'ty	Remarks
	Removing the rear brake pads		Remove the parts in the order listed.
1	Caliper	1	Refer to "REPLACING THE REAR BRAKE PADS".
2	Cover	1	
3	Clip	2	
4	Pad pin	2	
5	Pad spring	1	
6	Brake pad	2	
7	Caliper shim	2	
			For installation, reverse the removal procedure.

EAS00579

CAUTION:

Disc brake components rarely require disassembly.
Therefore, always follow these preventive measures:
- **Never disassemble brake components unless absolutely necessary.**
- **If any connection on the hydraulic brake system is disconnected, the entire brake system must be disassembled, drained, cleaned, properly filled, and bled after reassembly.**
- **Never use solvents on internal brake components.**
- **Use only clean or new brake fluid for cleaning brake components.**
- **Brake fluid may damage painted surfaces and plastic parts. Therefore, always clean up any spilt fluid immediately.**
- **Avoid brake fluid coming into contact with the eyes as it can cause serious injury.**

First aid for brake fluid entering the eyes:
- **Flush with water for 15 minutes and get immediate medical attention.**

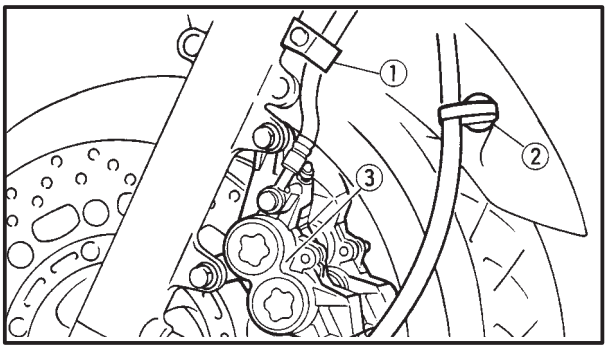

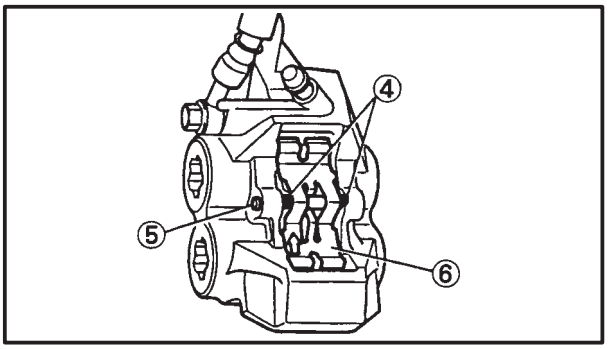

EAS00582

REPLACING THE FRONT BRAKE PADS

The following procedure applies to both brake calipers.

NOTE:

When replacing the brake pads, it is not necessary to disconnect the brake hose or disassemble the brake caliper.

1. Remove:
   - brake hose holder ①
   - speedometer cable guide ②
   - brake caliper ③
2. Remove:
   - brake pad clips ④
   - brake pad pin ⑤
   - brake pad spring ⑥

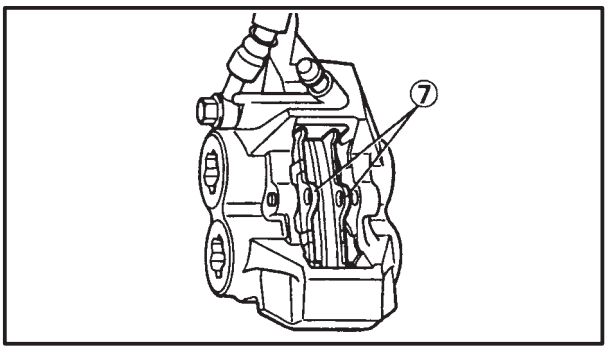

3. Remove:
   - brake pads ⑦

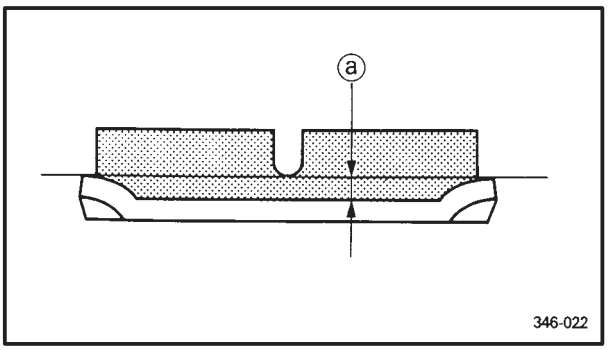

4. Measure:
   - brake pad wear limit ⓐ
     Out of specification → Replace the brake pads as a set.

	Brake pad wear limit **0.5 mm**

5. Install:
   - brake pads
   - brake pad spring

NOTE:

Always install new brake pads, and a brake pad spring as a set.

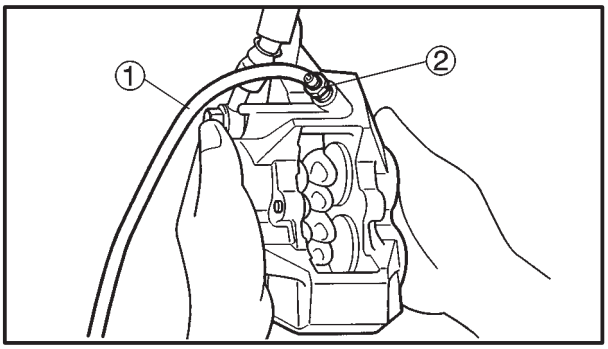

a. Connect a clear plastic hose ① tightly to the bleed screw ②. Put the other end of the hose into an open container.
b. Loosen the bleed screw and push the brake caliper pistons into the brake caliper with your finger.
c. Tighten the bleed screw.

	Bleed screw **6 Nm (0.6 m•kg)**

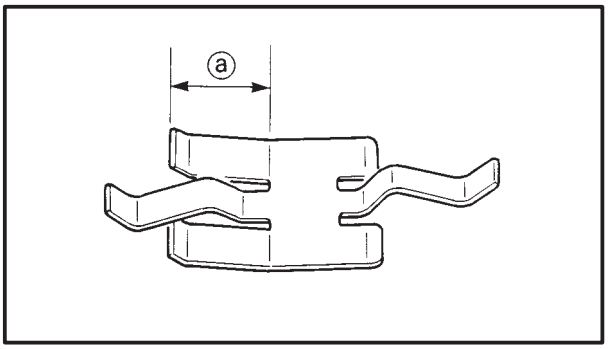

d. Install new brake pads and a new brake pad spring.

NOTE:

The arrow ⓐ on the brake pad spring must point in the direction of disc rotation.

6. Install:
   - brake pad pins
   - brake pad clips
   - brake caliper

	Brake caliper bolt **40 Nm (4.0 m•kg)**

7. Check:
   - brake fluid level
     Below the minimum level mark ⓐ → Add the recommended brake fluid to the proper level. Refer to "CHECKING THE BRAKE FLUID LEVEL" in chapter 3.
8. Check:
   - brake lever operation
     Soft or spongy feeling → Bleed the brake system.
     Refer to "BLEEDING THE HYDRAULIC BRAKE SYSTEM" in chapter 3.

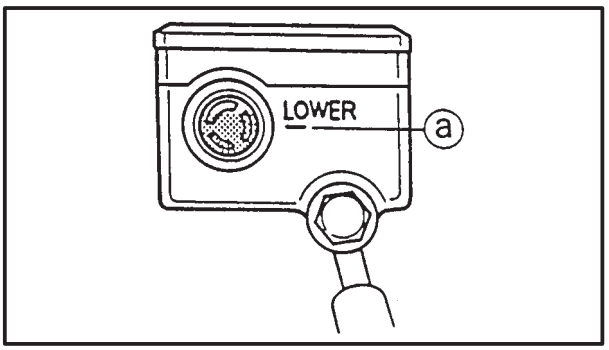

EAS00583

REPLACING THE REAR BRAKE PADS

NOTE:

When replacing the brake pads, it is not necessary to disconnect the brake hose or disassemble the brake caliper.

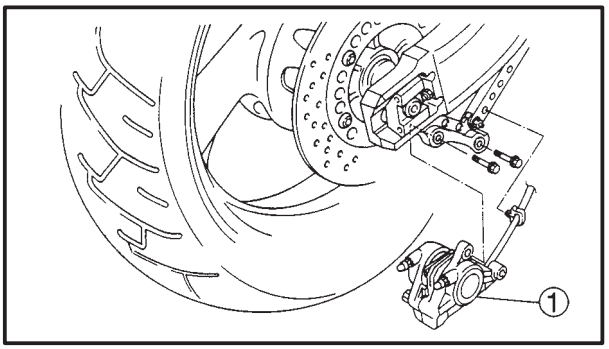

1. Remove:
   - brake caliper ①

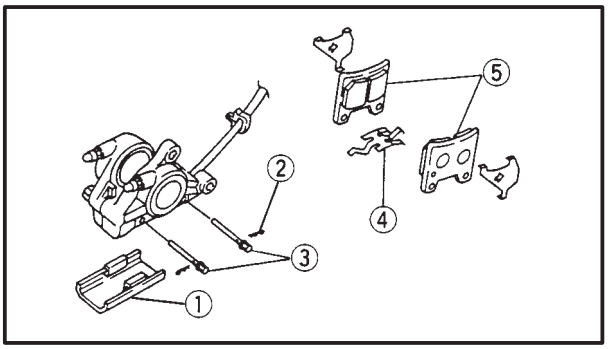

2. Remove:
   - brake pad cover ①
   - brake pad clips ②
   - brake pad pins ③
   - brake pad spring ④
3. Remove:
   - brake pads ⑤
     (along with the brake pad shims)

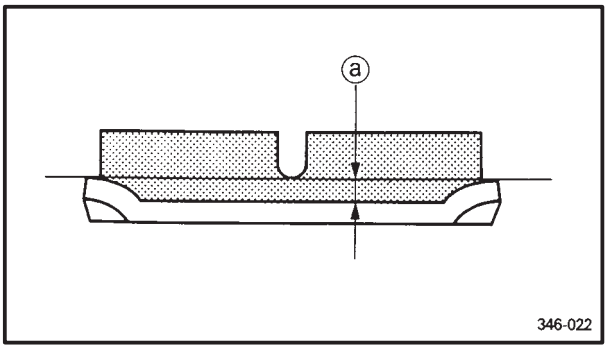

4. Measure:
   - brake pad wear limit ⓐ
     Out of specification → Replace the brake pads as a set.

	Brake pad wear limit **0.5 mm**

5. Install:
   - brake pad shims
     (onto the brake pads)
   - brake pads
   - brake pad spring

NOTE:

Always install new brake pads, brake pad shims, and a brake pad spring as a set.

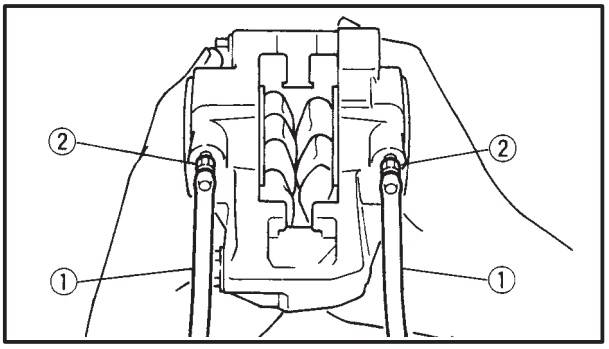

a. Connect a clear plastic hose ① tightly to the bleed screw ②. Put the other end of the hose into an open container.
b. Loosen the bleed screw and push the brake caliper pistons into the brake caliper with your finger.
c. Tighten the bleed screw.

	Bleed screw **6 Nm (0.6 m•kg)**

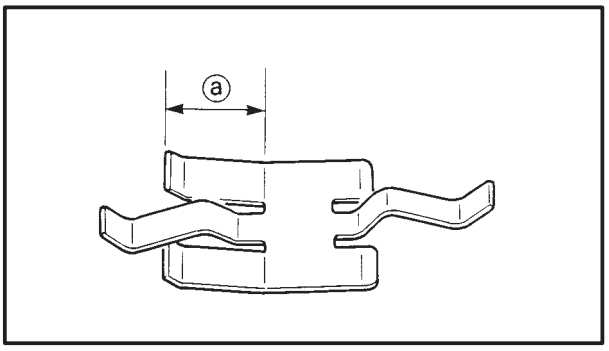

d. Install new brake pad shims onto the new brake pads.
e. Install new brake pads and a new brake pad spring.

NOTE:

The longer tangs ⓐ on the brake pad spring must point in the direction of disc rotation.

6. Install:
   - brake pad pins
   - brake pad clips
   - brake pad cover
   - brake caliper

	Brake caliper bolt **40 Nm (4.0 m•kg)**

7. Check:
   - brake fluid level
     Below the minimum level mark ⓐ → Add the recommended brake fluid to the proper level.
     Refer to "CHECKING THE BRAKE FLUID LEVEL" in chapter 3.
8. Check:
   - brake lever operation
     Soft or spongy feeling → Bleed the brake system.
     Refer to "BLEEDING THE HYDRAULIC BRAKE SYSTEM" in chapter 3.

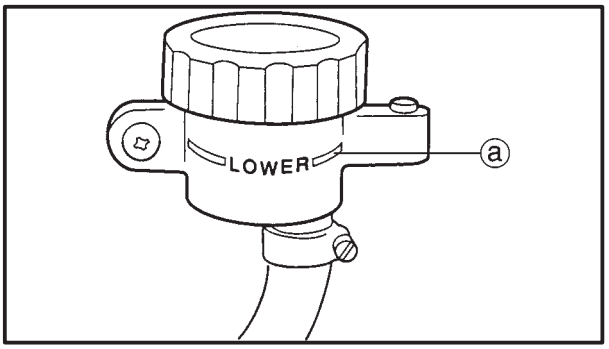

EAS00586

FRONT BRAKE MASTER CYLINDER

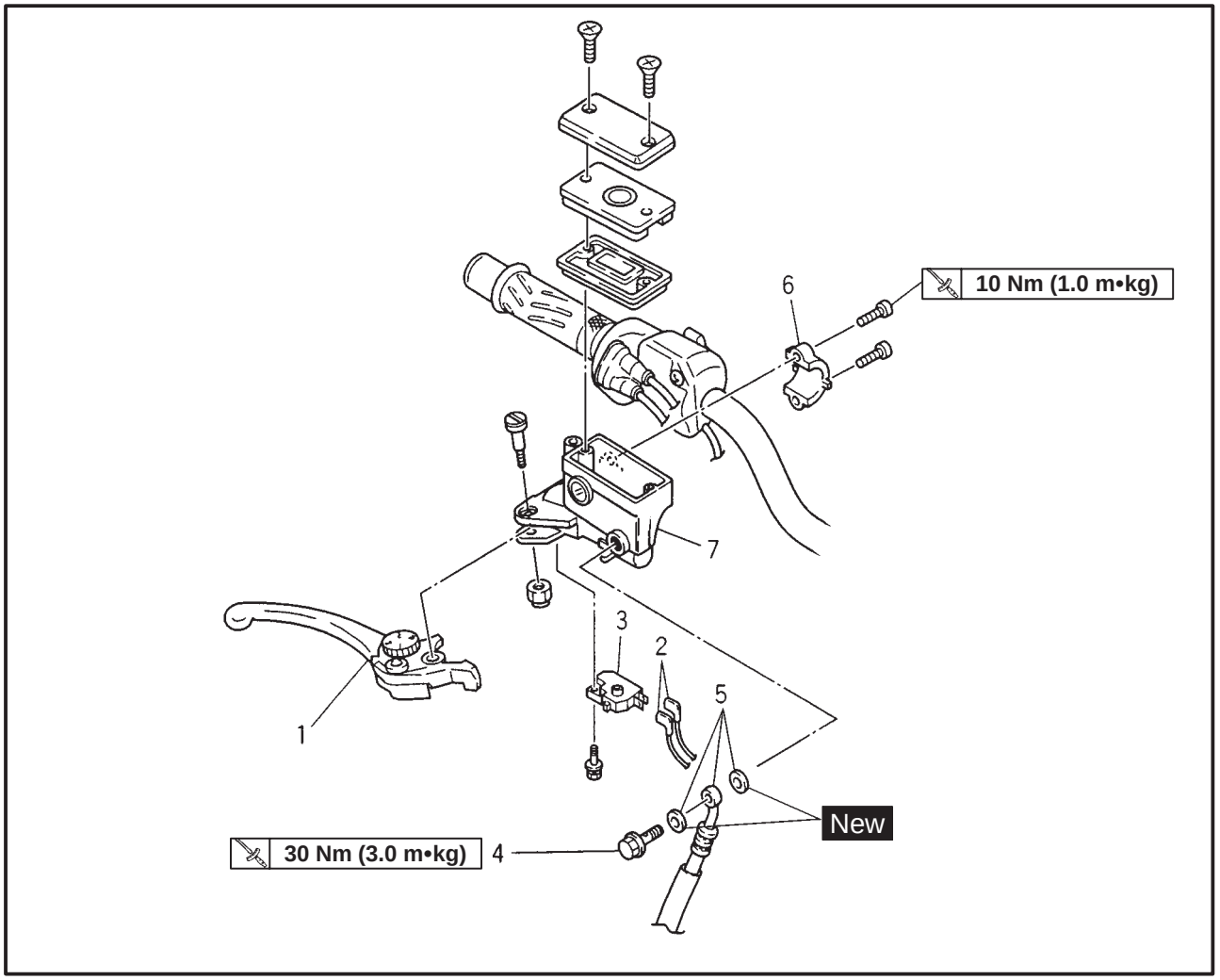

Order	Job/Part	Q'ty	Remarks
	Removing the front brake master cylinder Brake fluid		Remove the parts in the order listed. Drain
1	Brake lever	1	
2	Brake switch lead	2	
3	Front brake switch	1	
4	Union bolt	1	Refer to "DISASSEMBLING/ASSEMBLING AND INSTALLING THE REAR BRAKE MASTER CYLINDER".
5	Copper washers/Brake hose	2 /1	
6	Master cylinder bracket	1	
7	Master cylinder	1	
			For installation, reverse the removal procedure.

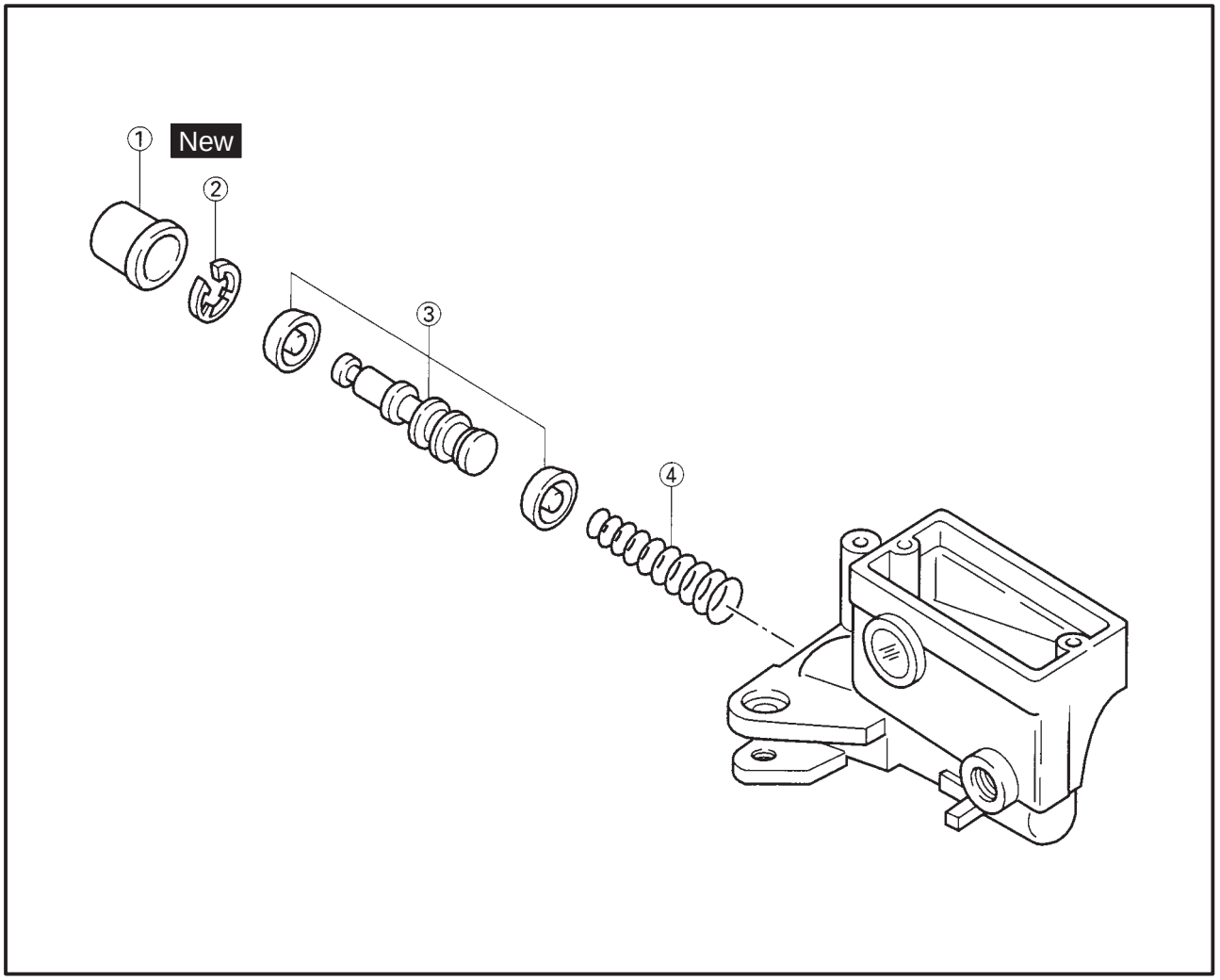

Order	Job/Part	Q'ty	Remarks
	Disassembling the front brake master cylinder		Disassembly the parts in the order listed.
①	Master cylinder boot	1	
②	Circlip	1	
③	Master cylinder kit	1	
④	Spring	1	
			For assembly, reverse the disassembly procedure.

EAS00586

REAR BRAKE MASTER CYLINDER

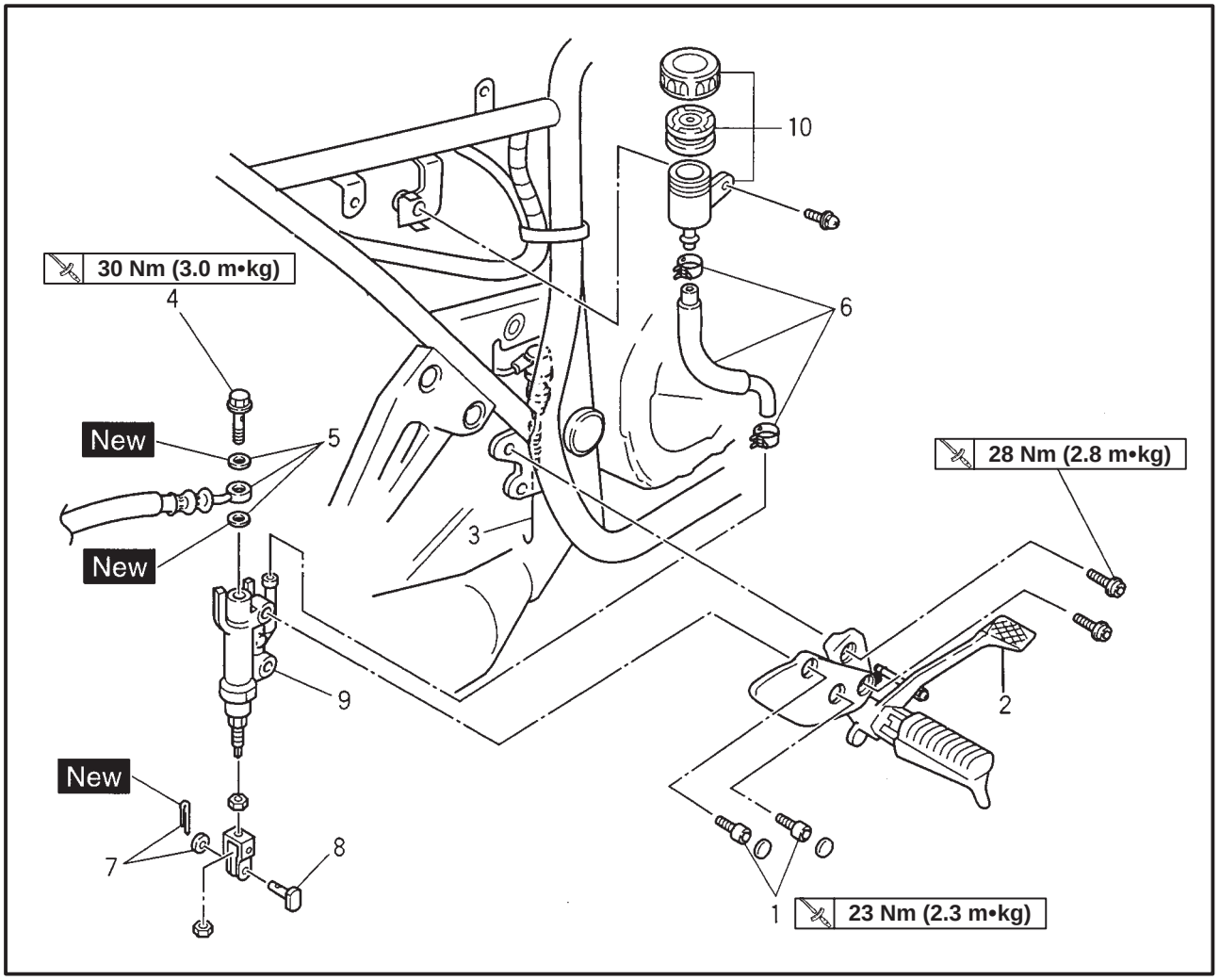

Order	Job/Part	Q'ty	Remarks
	Removing the rear brake master cylinder		Remove the parts in the order listed.
	Brake fluid		Drain
1	Bolts	2	
2	Brake pedal	1	
3	Brake switch	1	
4	Union bolt	1	Refer to "DISASSEMBLING/ASSEMBLING THE REAR BRAKE MASTER CYLINDER".
5	Copper washers/brake hose	2/1	
6	Clip/reservoir hose	2/1	
7	Cotter pin/copper washer	1/1	
8	Pin	1	
9	Master cylinder ass'y	1	
10	Reservoir tank	1	
			For installation, reverse removal procedure.

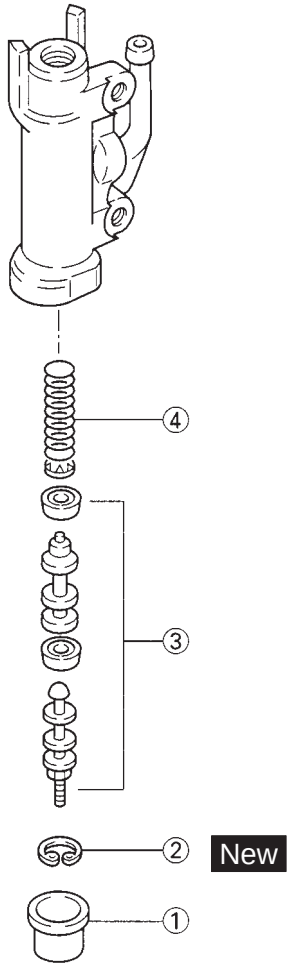

Order	Job/Part	Q'ty	Remarks
	Disassembling the rear brake master cylinder		Disassembly the parts in the order listed.
①	Master cylinder boot	1	
②	Circlip	1	
③	Master cylinder kit	1	
④	Spring	1	
			For assembly, reverse the disassembly procedure.

EAS00588

DISASSEMBLING THE FRONT BRAKE MASTER CYLINDER

NOTE:

Before disassembling the front brake master cylinder, drain the brake fluid from the entire brake system.

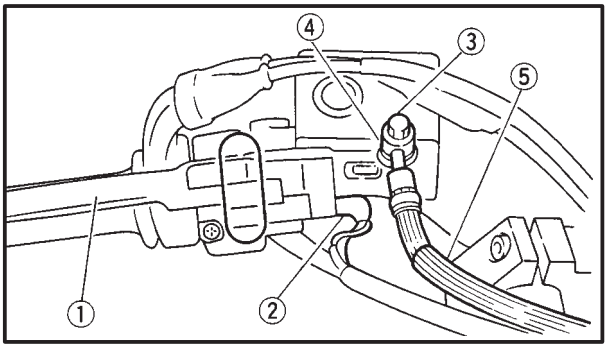

1. Remove:
   - rear view mirror (right)
   - brake lever ①
2. Disconnect:
   - brake switch coupler ②
     (from the brake switch)
3. Remove:
   - union bolt ③
   - copper washers ④
   - brake hose ⑤

NOTE:

To collect any remaining brake fluid, place a container under the master cylinder and the end of the brake hose.

EAS00589

DISASSEMBLING THE REAR BRAKE MASTER CYLINDER

NOTE:

Before disassembling the rear brake master cylinder, drain the brake fluid from the entire brake system.

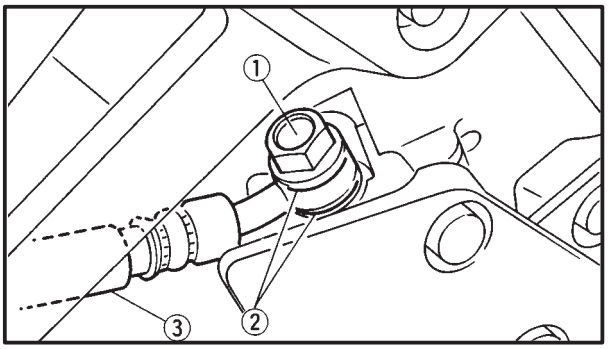

1. Remove:
   - union bolt ①
   - copper washers ②
   - brake hose ③

NOTE:

To collect any remaining brake fluid, place a container under the master cylinder and the end of the brake hose.

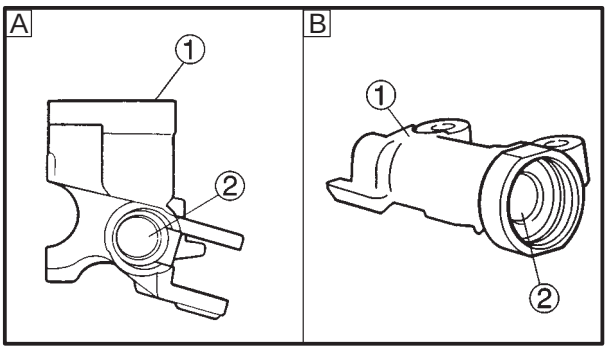

EAS00592

CHECKING THE FRONT AND REAR BRAKE MASTER CYLINDERS

The following procedure applies to the both of the brake master cylinders.

1. Check:
   - brake master cylinder ①
     Damage/scratches/wear → Replace.
   - brake fluid delivery passages ②
     (brake master cylinder body)
     Obstruction → Blow out with compressed air.

A Front
B Rear

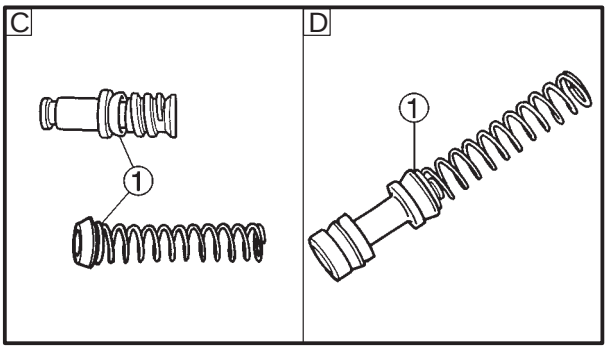

2. Check:
   - brake master cylinder kit ①
     Damage/scratches/wear → Replace.

C Front
D Rear

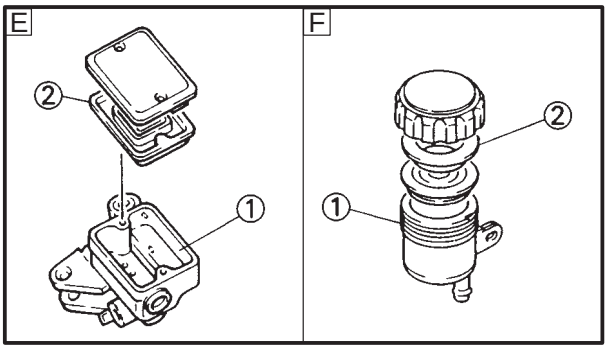

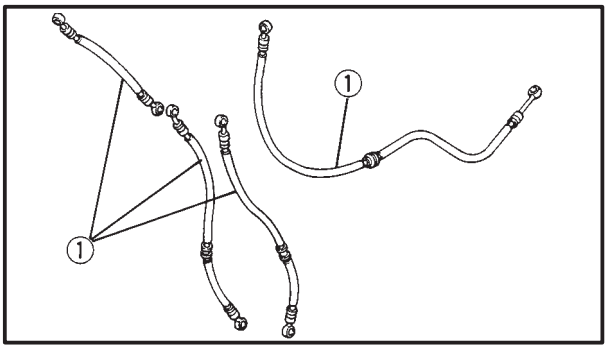

3. Check:
   - front brake master cylinder reservoir ①
     Cracks/damage → Replace.
   - front brake mater cylinder reservoir diaphragm ②
     Damage/wear → Replace.
   - rear brake fluid reservoir ①
     Cracks/damage → Replace.
   - rear brake fluid reservoir diaphragm ②
     Cracks/damage → Replace.

E Front
F Rear

4. Check:
   - brake hoses ①
     Cracks/damage/wear → Replace.

EAS00598

ASSEMBLING AND INSTALLING THE FRONT BRAKE MASTER CYLINDER

WARNING

- **Before installation, all internal brake components should be cleaned and lubricated with clean or new brake fluid.**
- **Never use solvents on internal brake components.**

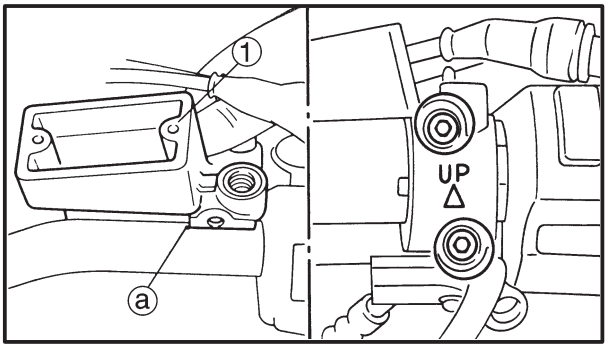

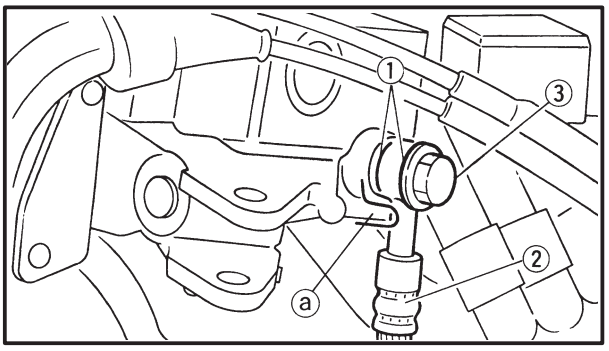

Recommended brake fluid
DOT 4

1. Install:
   - brake master cylinder ①

NOTE:

- Install the brake master cylinder holder with the “UP” mark facing up.
- Align the end of the brake master cylinder holder with the punch mark ⓐ on the handlebar.
- First, tighten the upper bolt, then the lower bolt.

Brake master cylinder bolt
10 Nm (1.0 m•kg)

2. Install:
   - copper washers (New) ①
   - brake hose ②
   - union bolt ③

Union bolt
30 Nm (3.0 m•kg)

WARNING

Proper brake hose routing is essential to insure safe motorcycle operation. Refer to “CABLE ROUTING”.

CAUTION:

When installing the brake hose onto the brake master cylinder make sure that the brake pipe touches the projection ⓐ as shown.

NOTE:

Turn the handlebar to the left and to the right to make sure that the brake hose does not touch other parts (e.g., wire harness, cables, leads). Correct if necessary.

3. Fill:
   - brake master cylinder reservoir
     (with the specified amount of the recommended brake fluid)

	Recommended brake fluid **DOT 4**

WARNING

- **Use only the designated brake fluid. Other brake fluids may cause the rubber seals to deteriorate, causing leakage and poor brake performance.**
- **Refill with the same type of brake fluid that is already in the system. Mixing brake fluids may result in a harmful chemical reaction, leading to poor brake performance.**
- **When refilling, be careful that water does not enter the reservoir. Water will significantly lower the boiling point of the brake fluid and could cause vapor lock.**

CAUTION:

Brake fluid may damage painted surfaces and plastic parts. Therefore, always clean up any spilt brake fluid immediately.

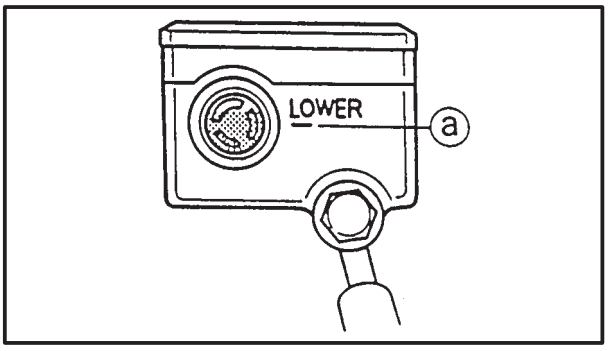

4. Bleed:
   - brake system
     Refer to “BLEEDING THE HYDRAULIC BRAKE SYSTEM” in chapter 3.
5. Check:
   - brake fluid level
     Below the minimum level mark ⓐ → Add the recommended brake fluid to the proper level.
     Refer to “CHECKING THE BRAKE FLUID LEVEL” in chapter 3.
6. Check:
   - brake lever operation
     Soft or spongy feeling → Bleed the brake system.
     Refer to “BLEEDING THE HYDRAULIC BRAKE SYSTEM” in chapter 3.

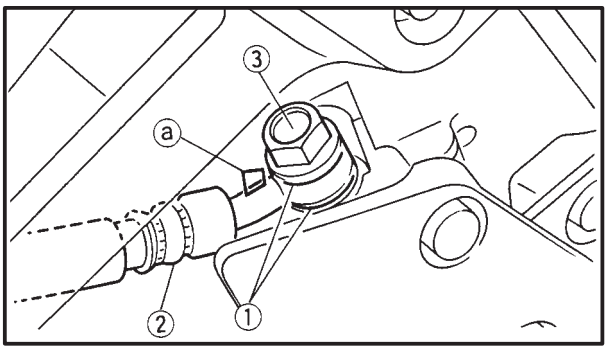

EAS00610

ASSEMBLING THE REAR BRAKE MASTER CYLINDER

1. Install:
   - copper washers (New) ①
   - brake hose ②

	Union bolt ③ **30 Nm (3.0 m•kg)**

⚠ WARNING

Proper brake hose routing is essential to insure safe motorcycle operation. Refer to "CABLE ROUTING".

CAUTION:

When installing the brake hose onto the brake master cylinder make sure that the brake pipe touches the projection ⓐ as shown.

2. Fill:
   - brake fluid reservoir

	Recommended brake fluid **DOT 4**

⚠ WARNING

- **Use only the designated brake fluid. Other brake fluids may cause the rubber seals to deteriorate, causing leakage and poor brake performance.**
- **Refill with the same type of brake fluid that is already in the system. Mixing brake fluids may result in a harmful chemical reaction, leading to poor brake performance.**
- **When refilling, be careful that water does not enter the reservoir. Water will significantly lower the boiling point of the brake fluid and could cause vapor lock.**

CAUTION:

Brake fluid may damage painted surfaces and plastic parts. Therefore, always clean up any spilt brake fluid immediately.

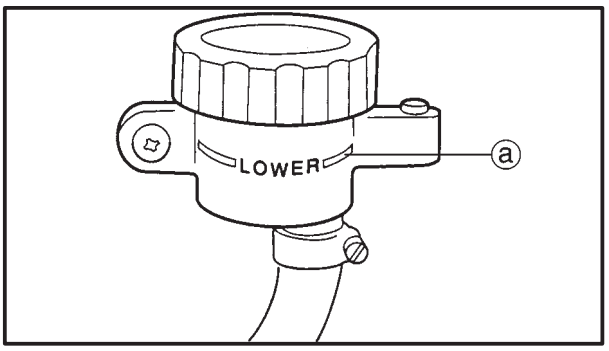

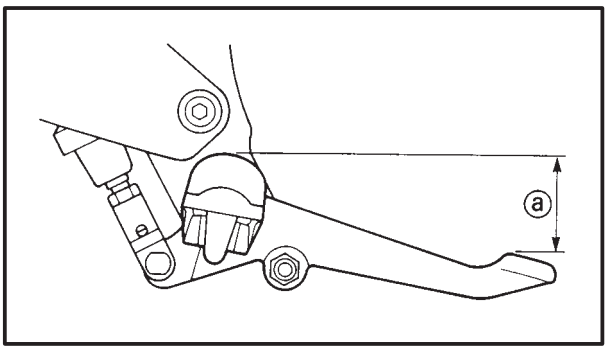

3. Bleed:
   - brake system
     Refer to “BLEEDING THE HYDRAULIC BRAKE SYSTEM” in chapter 3.
4. Check:
   - brake fluid level
     Below the minimum level mark ⓐ → Add the recommended brake fluid to the proper level.
     Refer to “CHECKING THE BRAKE FLUID LEVEL” in chapter 3.

5. Adjust:
   - brake pedal position ⓐ
     Refer to “ADJUSTING THE REAR BRAKE” in chapter 3.

Brake pedal position (below the top of the rider footrest) ⓐ
45 mm

6. Adjust:
   - rear brake light operation timing
     Refer to “ADJUSTING THE REAR BRAKE LIGHT SWITCH” in chapter 3.

EAS00613

FRONT BRAKE CALIPER

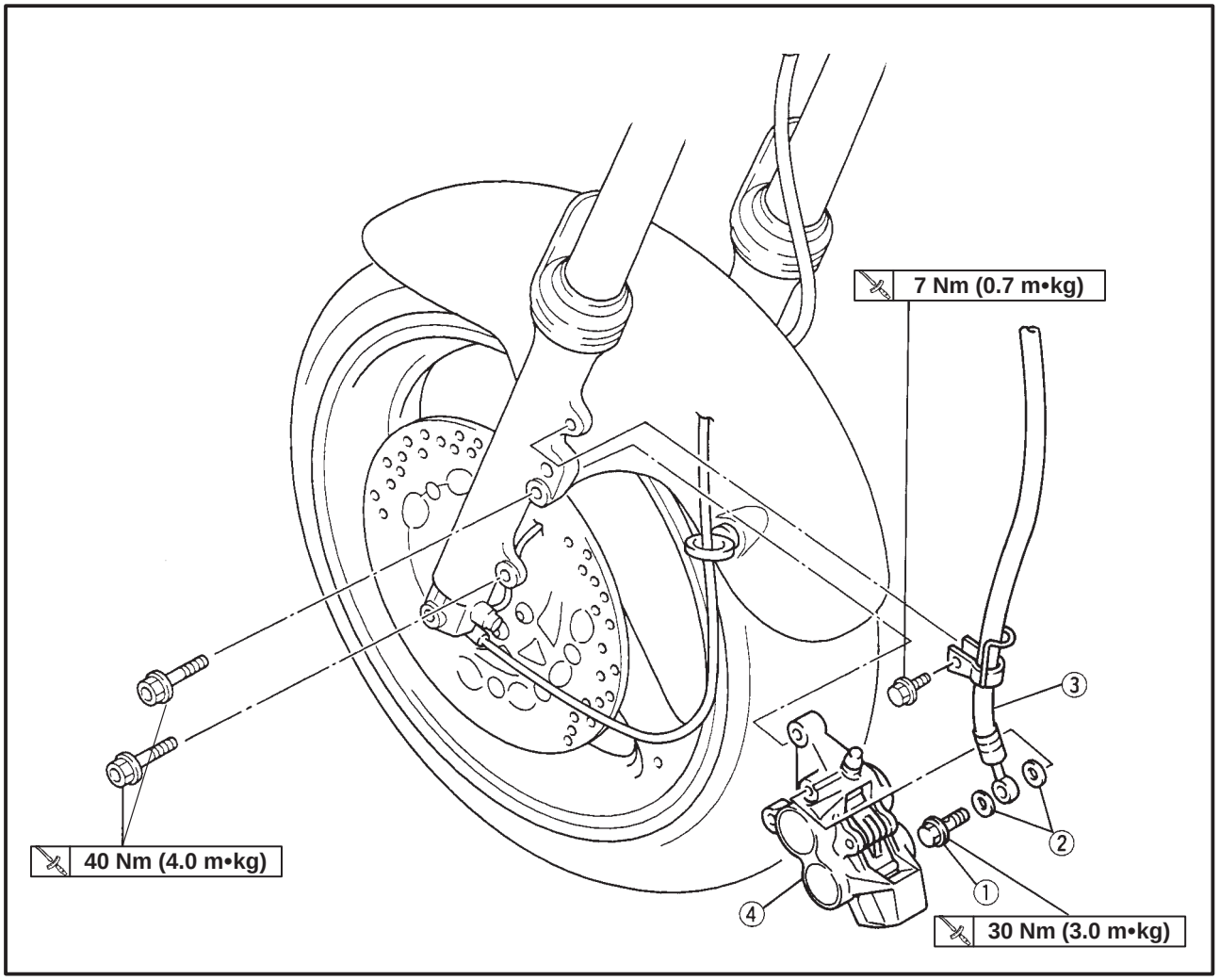

Order	Job/Part	Q'ty	Remarks
	Removing the front brake calipers		Remove the parts in the order listed.
	Brake fluid		Drain
1	Union bolts	2	Refer to "DISASSEMBLING/ ASSEMBLING AND INSTALLING THE FRONT BRAKE CALIPERS".
2	Copper washers	4	
3	Brake hoses	2	
4	Caliper ass'y	2	
			For installation, reverse the removal procedure.

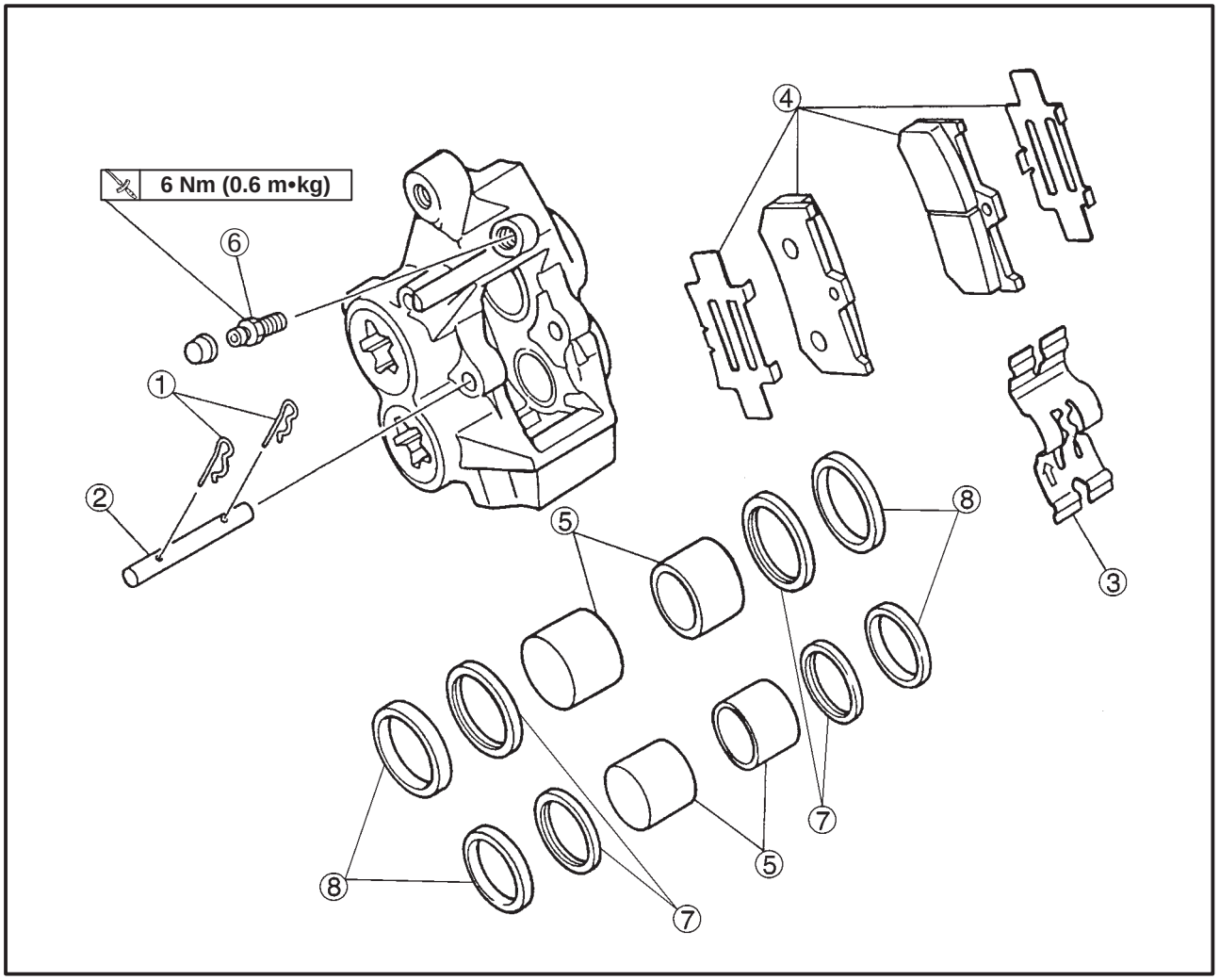

Order	Job/Part	Q'ty	Remarks
	Disassembling the front brake calipers. The following procedure applies to both of the front brake calipers.		Disassembly the parts in the order listed.
①	Clips	2	
②	Pad pin	1	
③	Pad spring	1	
④	Brake pads/shims	2/2	
⑤	Caliper pistons	4	
⑥	Bleed screw	1	Refer to "DISASSEMBLING THE FRONT BRAKE CALIPERS".
⑦	Dust seals	4	
⑧	Piston seals	4	
			For assembly, reverse the disassembly procedure.

ESA00616

REAR BRAKE CALIPER

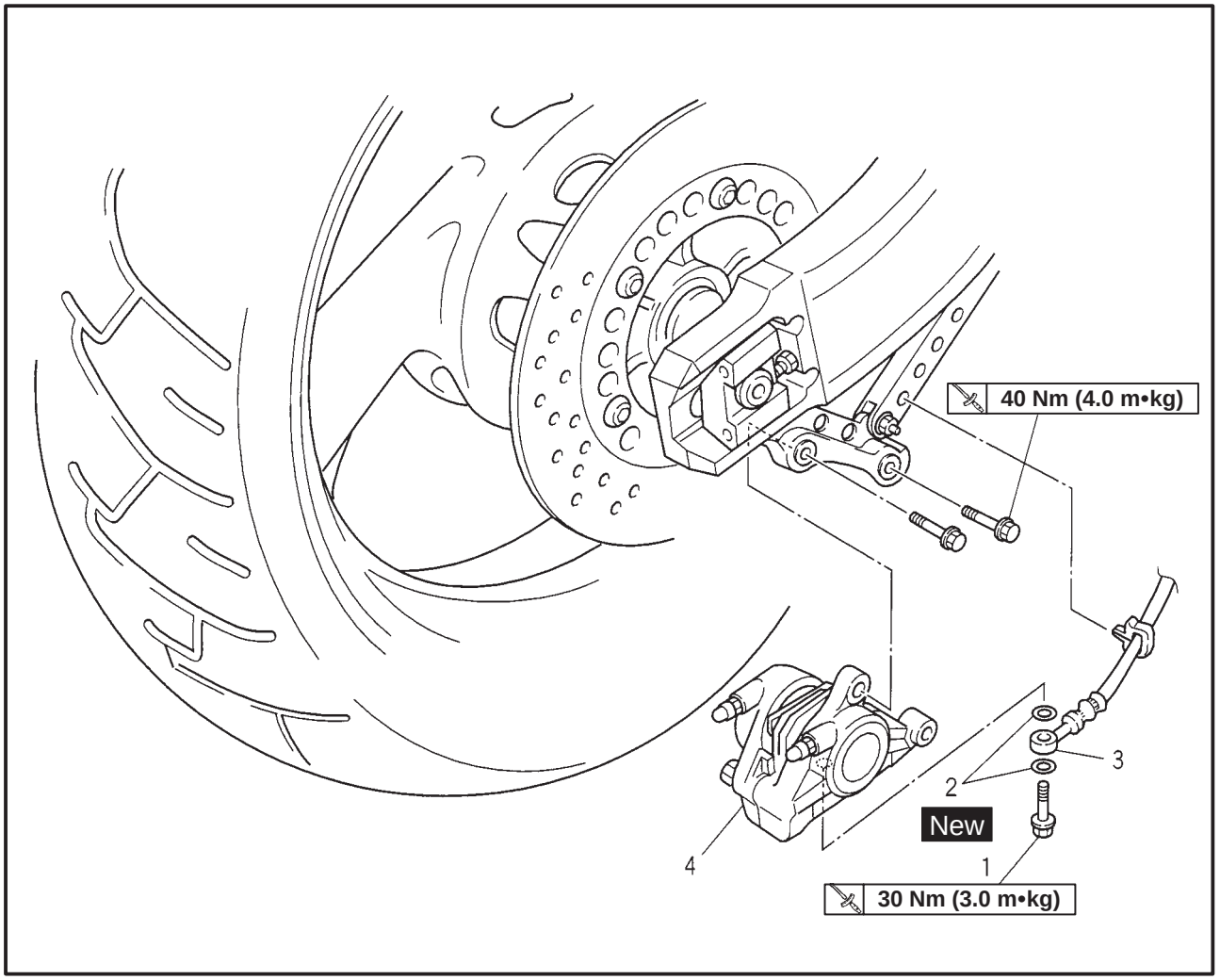

Order	Job/Part	Q'ty	Remarks
	Removing the rear brake caliper		Remove the parts in the order listed.
	Brake fluid		Drain
1	Union bolt	1	Refer to "DISASSEMBLING/ ASSEMBLING AND INSTALLING THE REAR BRAKE CALIPER".
2	Copper washers	2	
3	Brake hose	1	
4	Caliper ass'y	1	
			For installation, reverse the removal procedure.

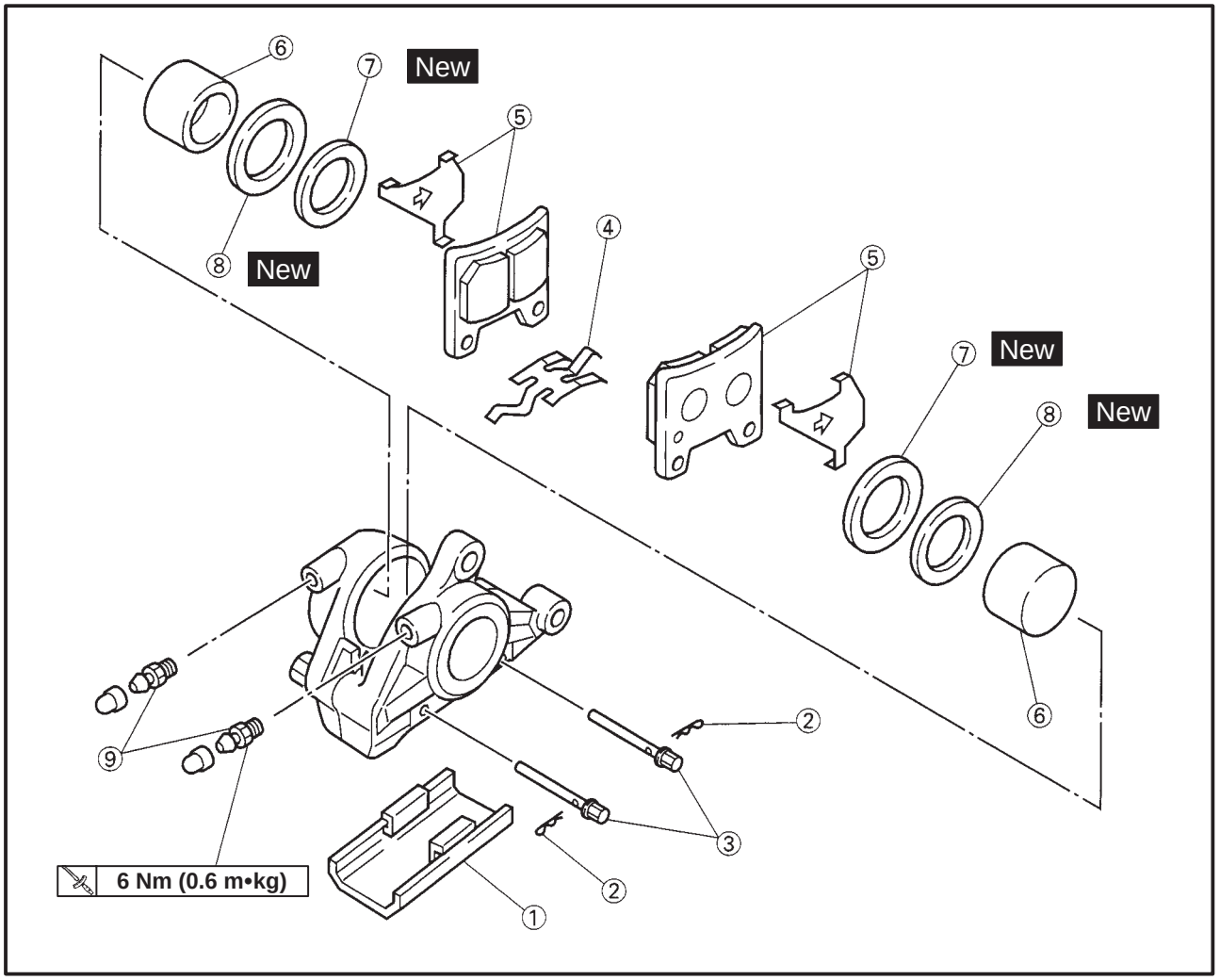

Order	Job/Part	Q'ty	Remarks
	Disassembling the rear brake caliper		Disassembly the parts in the order listed.
1	Cover	1	
2	Clips	2	
3	Pad pins	2	
4	Pad support	1	
5	Brake pads/shims	2/2	
6	Caliper pistons	2	Refer to "DISASSEMBLING THE REAR BRAKE CALIPER."
7	Dust seals	2	
8	Piston seals	2	
9	Bleed screws	2	
			For assembly, reverse the disassembly procedure.

EAS00625

DISASSEMBLING THE FRONT BRAKE CALIPERS

The following procedure applies to both of the brake calipers.

NOTE:

Before disassembling either brake caliper, drain the brake fluid from the entire brake system.

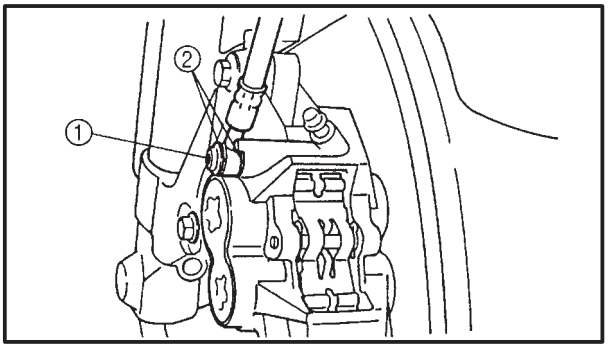

1. Remove:
   - union bolt ①
   - copper washers ②
   - brake hose

NOTE:

Put the end of the brake hose into a container and pump out the brake fluid carefully.

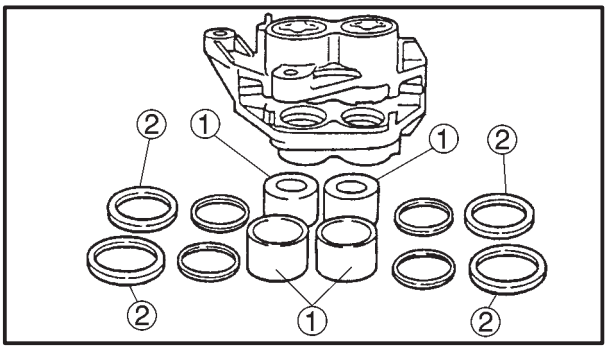

2. Remove:
   - brake caliper pistons ①
   - brake caliper piston seals ②

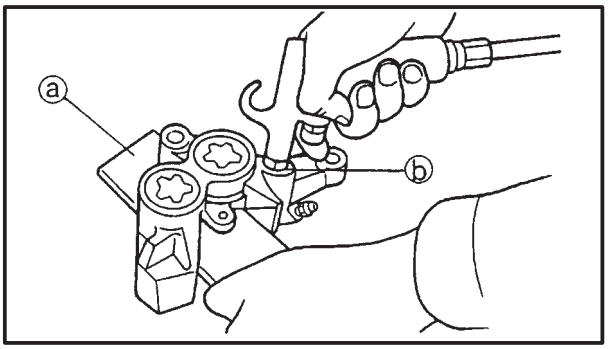

a. Secure the right side brake caliper pistons with a piece of wood ⓐ.
b. Blow compressed air into the brake hose joint opening ⓑ to force out the left side pistons from the brake caliper.
c. Remove the brake caliper piston seals.
d. Repeat the previous steps to force out the right side pistons from the brake caliper.

WARNING

- **Never try to pry out the brake caliper pistons.**
- **Do not loosen the bolts.**

EAS00629

DISASSEMBLING THE REAR BRAKE CALIPER

NOTE:

Before disassembling the brake caliper, drain the brake fluid from the entire brake system.

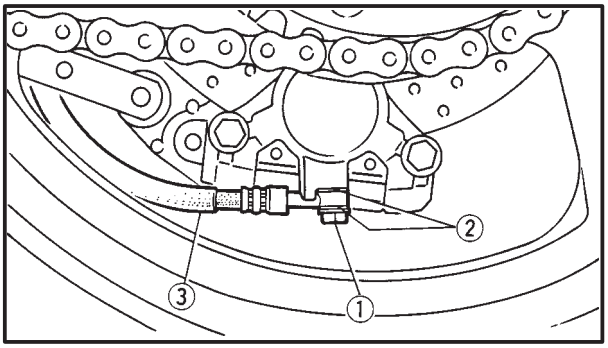

1. Remove:
   - union bolt ①
   - copper washers ②
   - brake hose ③

NOTE:

Put the end of the brake hose into a container and pump out the brake fluid carefully.

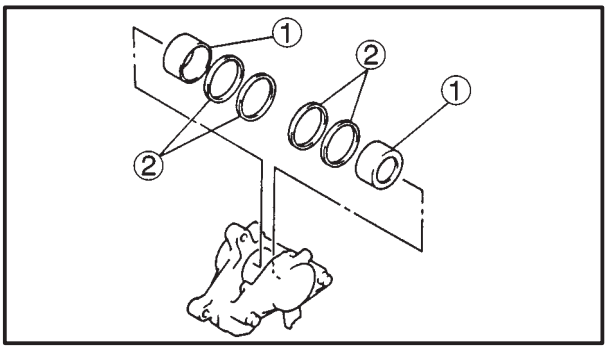

2. Remove:
   - brake caliper pistons ①
   - brake caliper piston seals ②

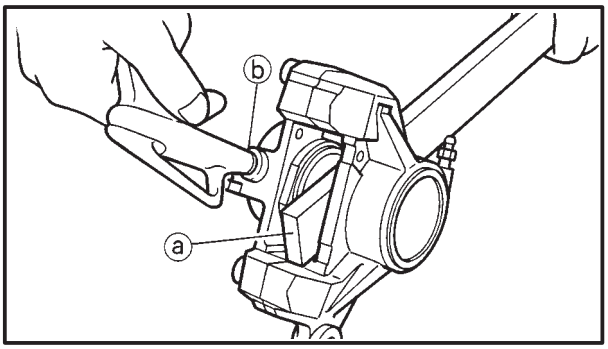

a. Secure the right side brake caliper pistons with a piece of wood ⓐ.
b. Blow compressed air into the brake hose joint opening ⓑ to force out the left side pistons from the brake caliper.

⚠ WARNING

- **Never try to pry out the brake caliper pistons.**
- **Do not loosen the bolts.**

c. Remove the brake caliper piston seals.
d. Repeat the previous steps to force out the right side pistons from the brake caliper.

EAS00633

CHECKING THE FRONT AND REAR BRAKE CALIPERS

Recommended brake component replacement schedule	
Brake pads	If necessary
Piston seals	Every two years
Brake hoses	Every two years
Brake fluid	Every two years and whenever the brake is disassembled.

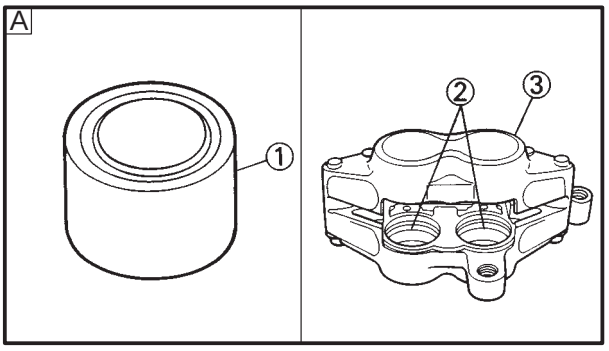

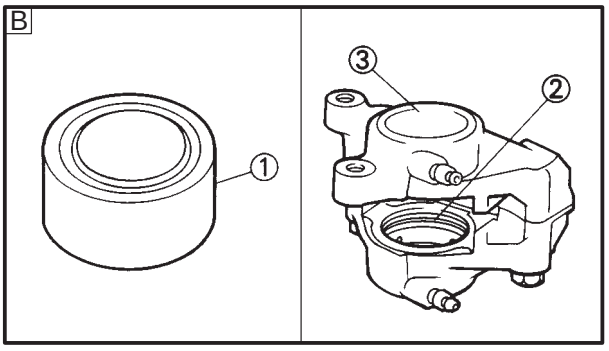

1. Check:
   - brake caliper pistons ①
     Rust/scratches/wear → Replace the brake caliper.
   - brake caliper cylinders ②
     Scratches/wear → Replace the brake caliper.
   - brake calipers ③
     Cracks/damage → Replace.
   - brake fluid delivery passages (brake caliper body)
     Obstruction → Blow out with compressed air.

⚠ WARNING

Whenever a brake caliper is disassembled, replace the brake caliper piston seals.

A Front

B Rear

EAS00638

ASSEMBLING AND INSTALLING THE FRONT BRAKE CALIPERS

The following procedure applies to both of the brake calipers.

⚠ WARNING

- **Before installation, all internal brake components should be cleaned and lubricated with clean or new brake fluid.**

- **Never use solvents on internal brake components as they will cause the piston seals to swell and distort.**
- **Whenever a brake caliper is disassembled, replace the brake caliper piston seals.**

Recommended brake fluid
DOT 4

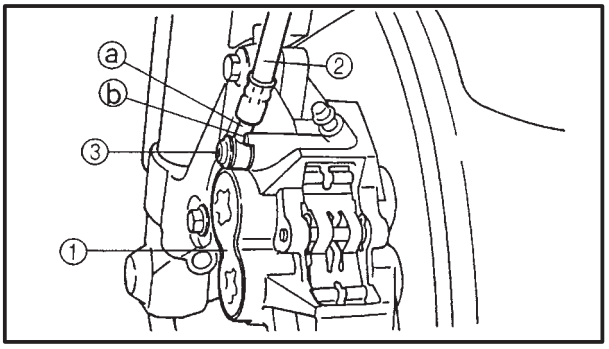

1. Install:
   - brake caliper ①
     (temporarily)
   - copper washers (New)
   - brake hose ②
   - union bolt ③

Union bolt
30 Nm (3.0 m•kg)

WARNING

Proper brake hose routing is essential to insure safe motorcycle operation. Refer to "CABLE ROUTING".

CAUTION:

When installing the brake hose onto the brake caliper ①, make sure that the brake pipe ⓐ touches the projection ⓑ on the brake caliper.

2. Remove:
   - brake caliper
3. Install:
   - brake pads
   - brake pad springs
   - brake caliper retaining bolt
   - bake caliper
   - brake hose holder
     Refer to "REPLACING THE BRAKE PADS".

Brake caliper bolt
40 Nm (4.0 m•kg)

Brake hose holder bolt
7 Nm (0.7 m•kg)

4. Fill:
   - brake master cylinder reservoir
     (with the specified amount of the recommended brake fluid)

Recommended brake fluid
DOT 4

WARNING

- **Use only the designated brake fluid. Other brake fluids may cause the rubber seals to deteriorate, causing leakage and poor brake performance.**
- **Refill with the same type of brake fluid that is already in the system. Mixing brake fluids may result in a harmful chemical reaction, leading to poor brake performance.**
- **When refilling, be careful that water does not enter the reservoir. Water will significantly lower the boiling point of the brake fluid and could cause vapor lock.**

CAUTION:

Brake fluid may damage painted surfaces and plastic parts. Therefore, always clean up any spilt brake fluid immediately.

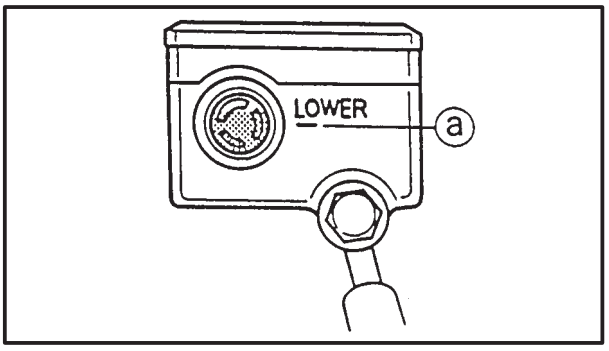

5. Bleed:
   - brake system
     Refer to “BLEEDING THE HYDRAULIC BRAKE SYSTEM” in chapter 3.
6. Check:
   - brake fluid level
     Below the minimum level mark ⓐ → Add the recommended brake fluid to the proper level.
     Refer to “CHECKING THE BRAKE FLUID LEVEL” in chapter 3.
7. Check:
   - brake lever operation
     Soft or spongy feeling → Bleed the brake system.
     Refer to “BLEEDING THE HYDRAULIC BRAKE SYSTEM” in chapter 3.

EAS00642

ASSEMBLING AND INSTALLING THE REAR BRAKE CALIPER

WARNING

- **Before installation, all internal brake components should be cleaned and lubricated with clean or new brake fluid.**
- **Never use solvents on internal brake components as they will cause the piston seals to swell and distort.**
- **Whenever a brake caliper is disassembled, replace the brake caliper piston seals.**

Recommended brake fluid
DOT 4

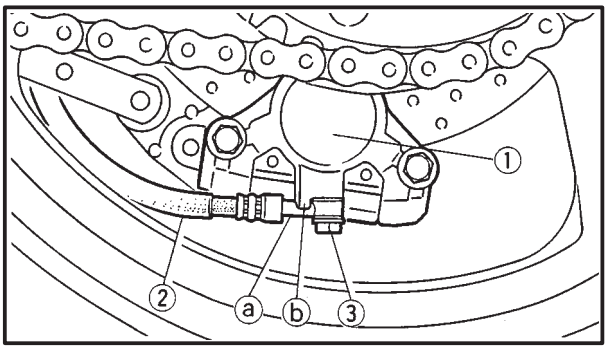

1. Install:
   - brake caliper ① (temporarily)
   - copper washers New
   - brake hose ②
   - union bolt ③ — **30 Nm (3.0 m•kg)**

WARNING

Proper brake hose routing is essential to insure safe motorcycle operation. Refer to "CABLE ROUTING".

CAUTION:

When installing the brake hose onto the brake caliper ①, make sure that the brake pipe ⓐ touches the projection ⓑ on the brake caliper.

2. Remove:
   - brake caliper
3. Install:
   - brake pads
   - brake pad springs
   - brake caliper — **40 Nm (4.0 m•kg)**
   - brake hose holder — **7 Nm (7.0 m•kg)**

   Refer to "REPLACING THE REAR BRAKE PADS".

4. Fill:
   - brake fluid reservoir
     (with the specified amount of the recommended brake fluid)

Recommended brake fluid
DOT 4

WARNING

- **Use only the designated brake fluid. Other brake fluids may cause the rubber seals to deteriorate, causing leakage and poor brake performance.**
- **Refill with the same type of brake fluid that is already in the system. Mixing brake fluids may result in a harmful chemical reaction, leading to poor brake performance.**
- **When refilling, be careful that water does not enter the brake fluid reservoir. Water will significantly lower the boiling point of the brake fluid and could cause vapor lock.**

CAUTION:

Brake fluid may damage painted surfaces and plastic parts. Therefore, always clean up any spilt brake fluid immediately.

5. Bleed:
   - brake system
     Refer to “BLEEDING THE HYDRAULIC BRAKE SYSTEM” in chapter 3.

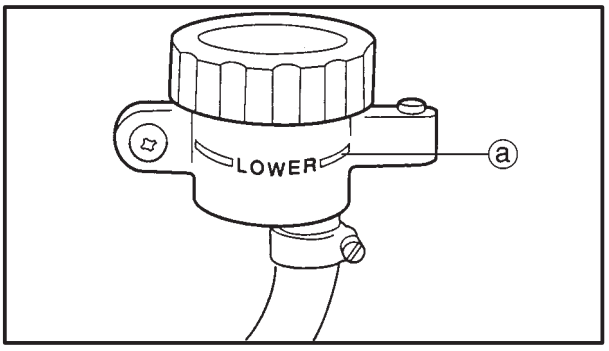

6. Check:
   - brake fluid level
     Below the minimum level mark ⓐ → Add the recommended brake fluid to the proper level.
     Refer to “CHECKING THE BRAKE FLUID LEVEL” in chapter 3.

7. Check:
   - brake pedal operation
     Soft or spongy feeling → Bleed the brake system.
     Refer to “BLEEDING THE HYDRAULIC BRAKE SYSTEM” in chapter 3.

EAS00647

FRONT FORK

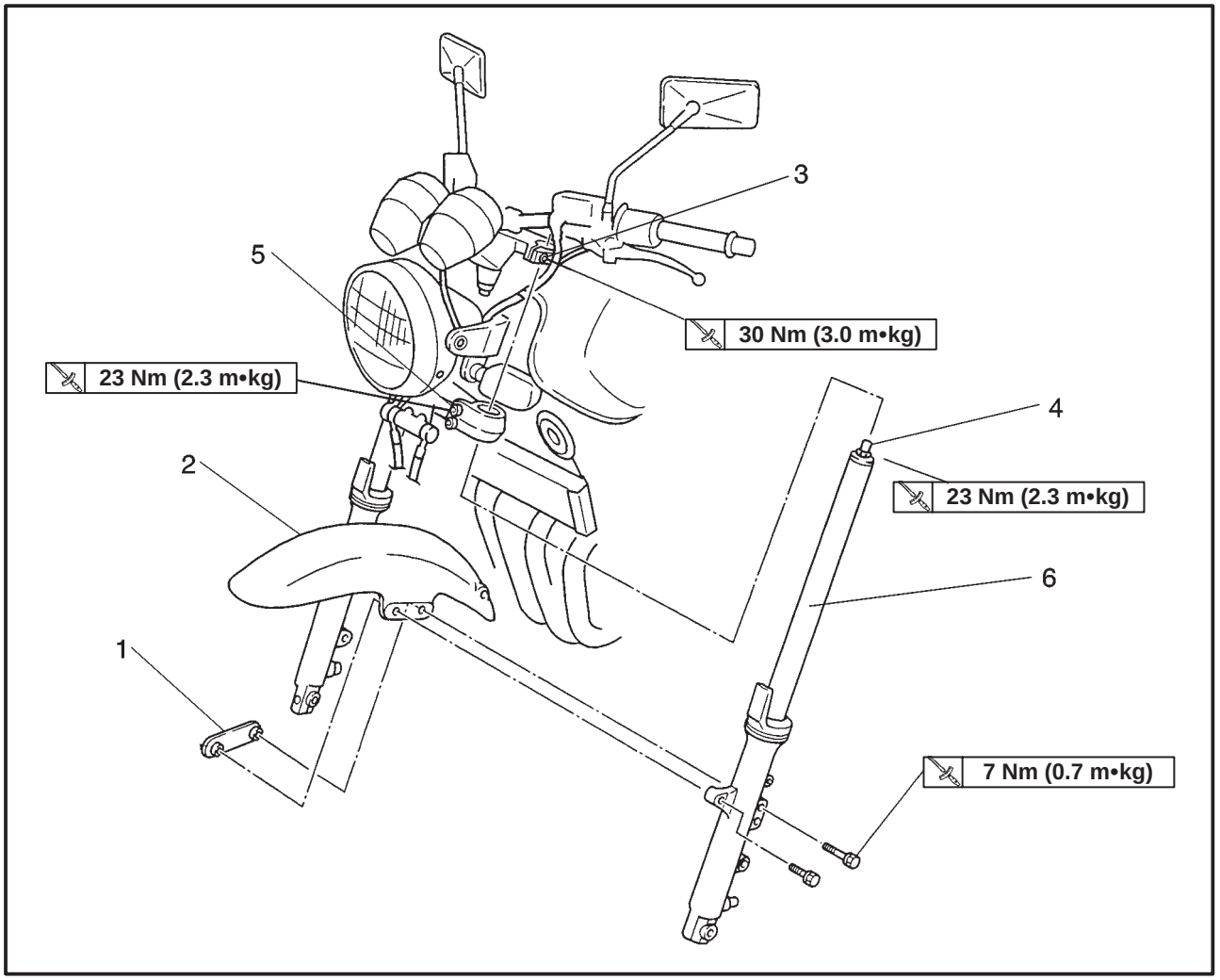

Order	Job/Part	Q'ty	Remarks
	Removing the front fork		Remove the parts in the order listed.
	Front wheel		Refer to "FRONT WHEEL AND BRAKE DISCS".
	Brake calipers		
1	Brackets	2	
2	Front fender	1	
3	Bolts (upper bracket)	2	Refer to "REMOVING/INSTALLING THE FRONT FORK LEGS".
4	Cap bolts	2	
5	Bolts (lower bracket)	4	
6	Front fork (left/right)	1/1	
			For installation, reverse the removal procedure.

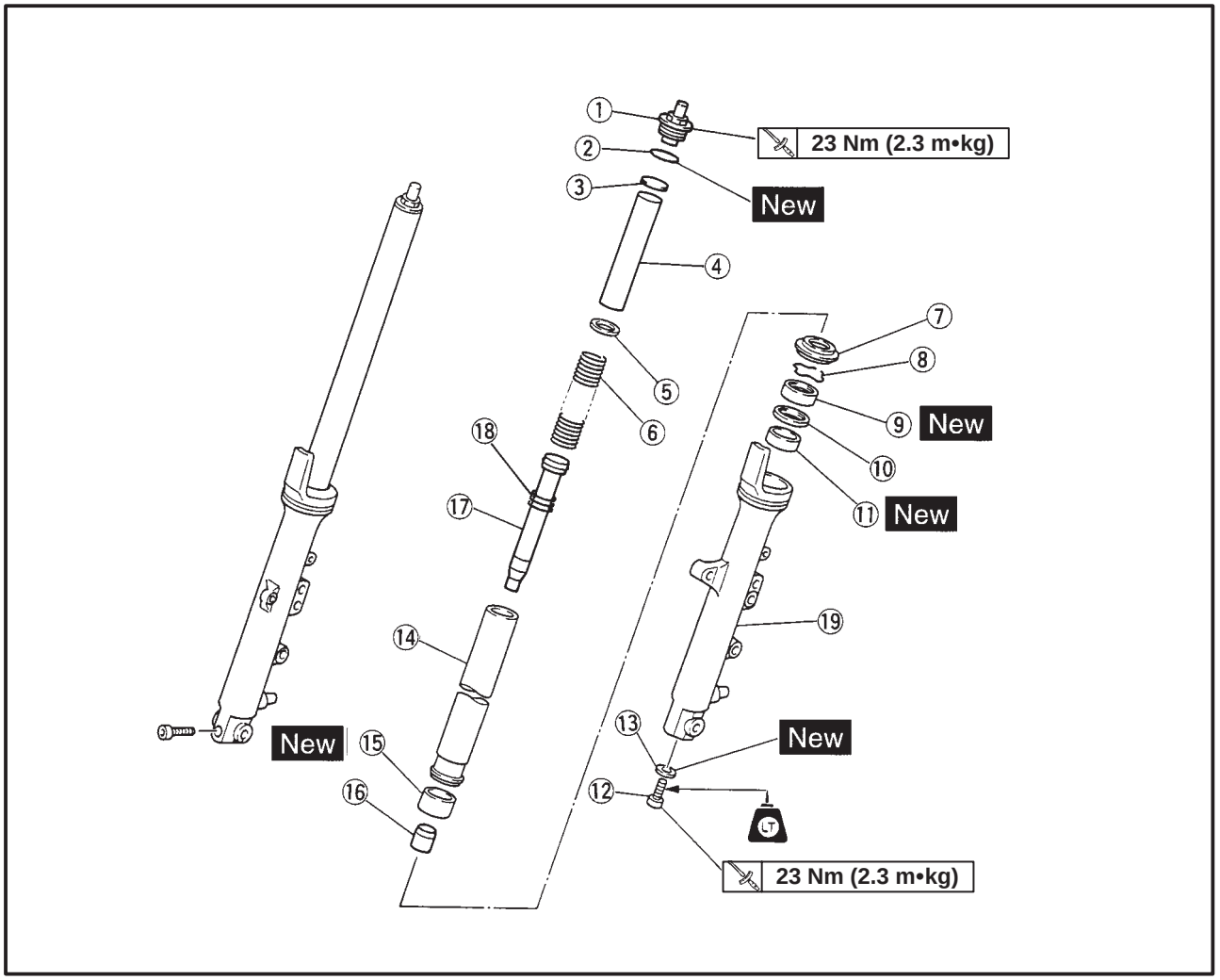

Order	Job/Part	Q'ty	Remarks
	Disassembling the front fork		Disassembly the parts in the order listed.
①	Cap bolts	2	Refer to "DISASSEMBLING/ ASSEMBLING THE FRONT FORK LEGS".
②	O-rings	2	
③	Plates	2	
④	Spacers	2	
⑤	Spring seats	2	
⑥	Fork springs	2	
⑦	Dust seals	2	
⑧	Oil seal clips	2	
⑨	Oil seals	2	
⑩	Seal spacers	2	
⑪	Outer tube bushings	2	
⑫	Bolts (damper rod)	2	
⑬	Gaskets	2	

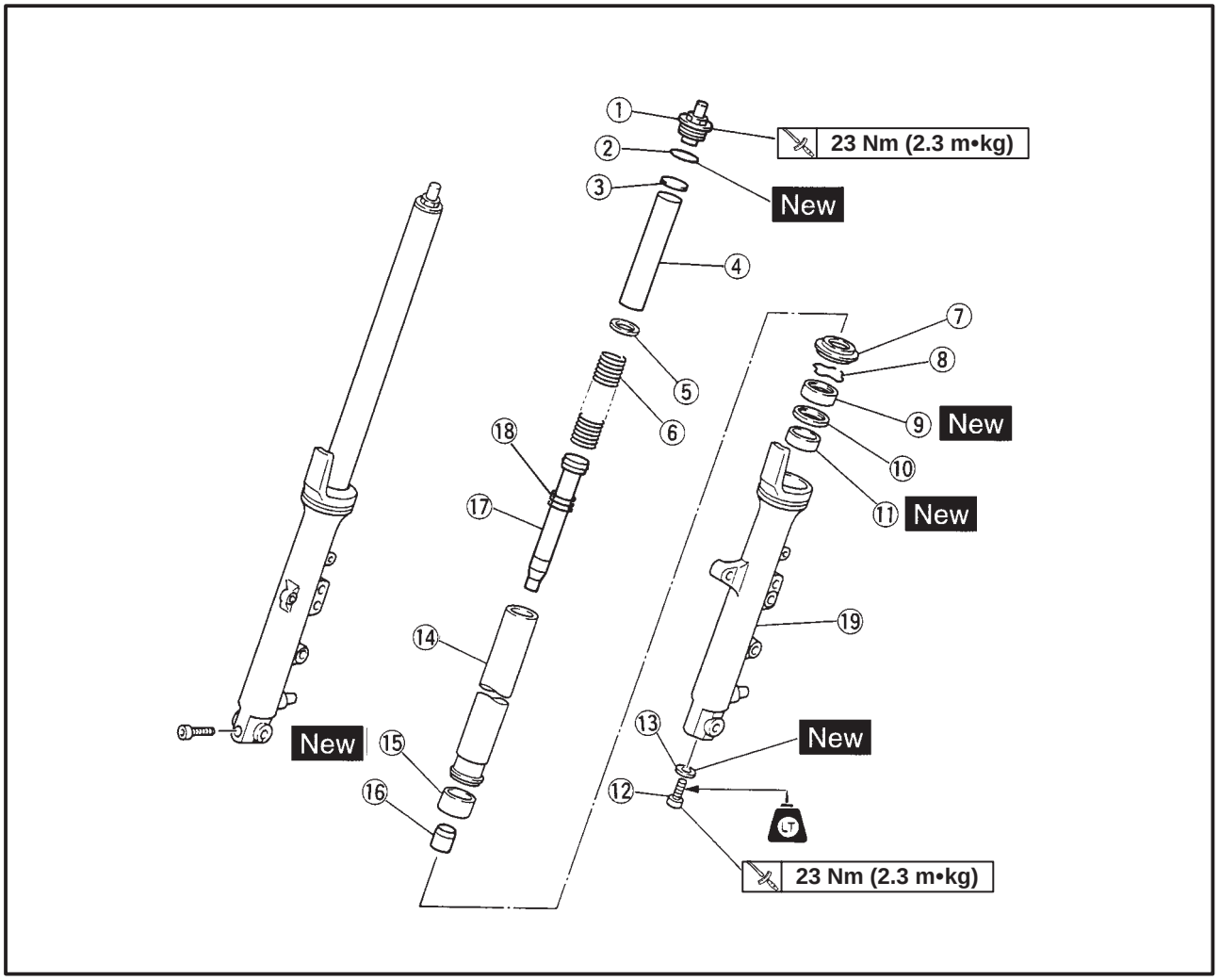

Order	Job/Part	Q'ty	Remarks
⑭	Inner tubes	2	Refer to "DISASSEMBLING/ ASSEMBLING THE FRONT FORK LEGS".
⑮	Inner tube bushings	2	
⑯	Oil flow stoppers	2	
⑰	Damper rods	2	
⑱	Damper rod springs	2	
⑲	Outer tubes	2	
			For assembly, reverse the disassembly procedure.

EAS00649

REMOVING THE FRONT FORK LEGS

The following procedure applies to both of the front fork legs.

1. Stand the motorcycle on a level surface.

WARNING

Securely support the motorcycle so that there is no danger of it falling over.

NOTE:

Place the motorcycle on a suitable stand so that the front wheel is elevated.

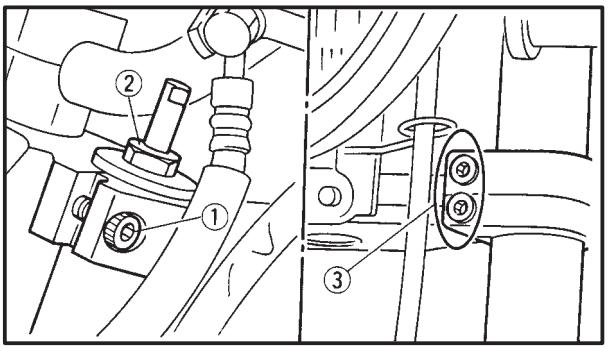

2. Loosen:
   - upper bracket pinch bolt ①
   - cap bolt ②
   - lower bracket pinch bolt ③

WARNING

Before loosening the upper and lower bracket pinch bolts, support the front fork leg.

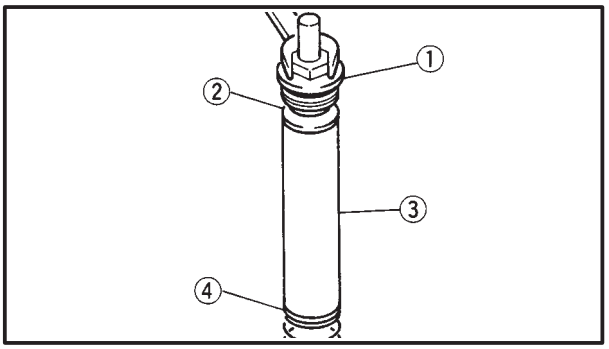

3. Remove:
   - front fork leg

EAS00653

DISASSEMBLING THE FRONT FORK LEGS

The following procedure applies to both of the front fork legs.

1. Loosen the spring preload adjuster fully.
2. Remove:
   - cap bolt ①
   - plate ②
   - spacer ③
   - spring seat ④
   - spring
3. Drain
   - fork oil

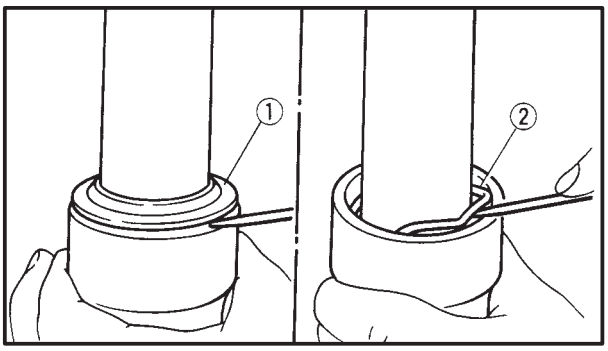

4. Remove:
   - dust seal ①
   - oil seal clip ②
     (with a flat-head screwdriver)

CAUTION:

Do not scratch the inner tube.

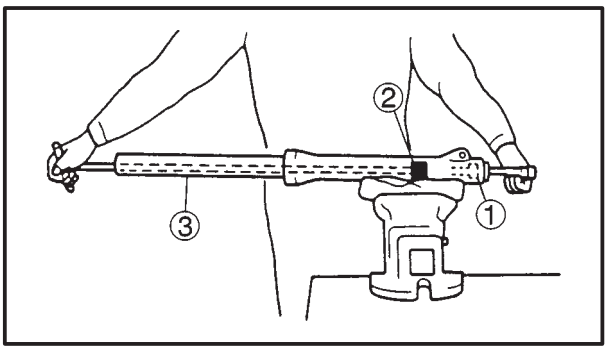

5. Remove:
   - damper rod bolt ①

NOTE:

While holding the damper rod with the damper rod holder ② and T-handle ③, loosen the damper rod bolt.

Damper rod holder (30 mm)
90890-01327
T-Handle
90890-01326

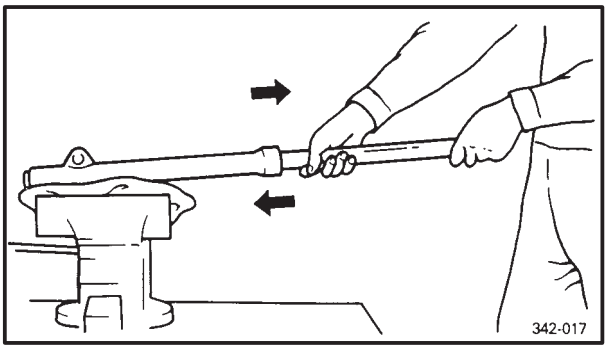

6. Remove:
   - inner tube

▼▼▼▼▼▼▼▼▼▼▼▼▼▼▼▼▼▼▼▼▼▼▼▼▼▼▼▼▼▼▼▼

a. Hold the front fork leg horizontally.
b. Securely clamp the brake caliper bracket in a vise with soft jaws.
c. Separate the inner tube from the outer tube by pulling the inner tube forcefully but carefully.

CAUTION:

- **Excessive force will damage the oil seal and bushing. A damaged oil seal or bushing must be replaced.**
- **Avoid bottoming the inner tube into the outer tube during the above procedure, as the oil flow stopper will be damaged.**

▲▲▲▲▲▲▲▲▲▲▲▲▲▲▲▲▲▲▲▲▲▲▲▲▲▲▲▲▲▲▲▲

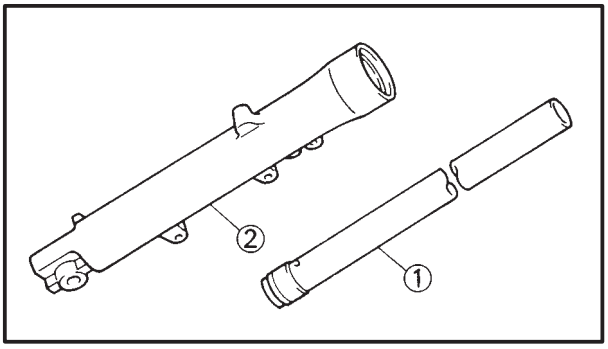

EAS00657

CHECKING THE FRONT FORK LEGS

The following procedure applies to both of the front fork legs.

1. Check:
   - inner tube ①
   - outer tube ②
     Bends/damage/scratches → Replace.

⚠ WARNING

Do not attempt to straighten a bent inner tube as this may dangerously weaken it.

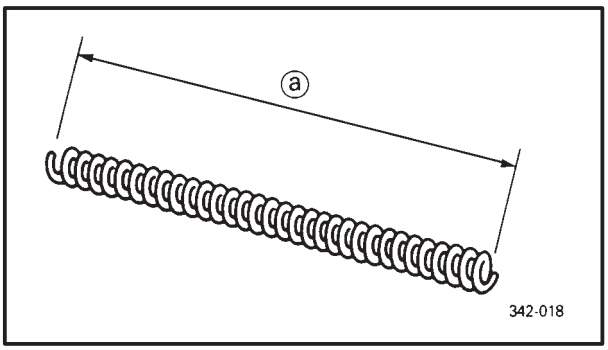

2. Measure:
   - spring free length ⓐ
     Over the specified limit → Replace.

	Spring free length limit **395 mm**

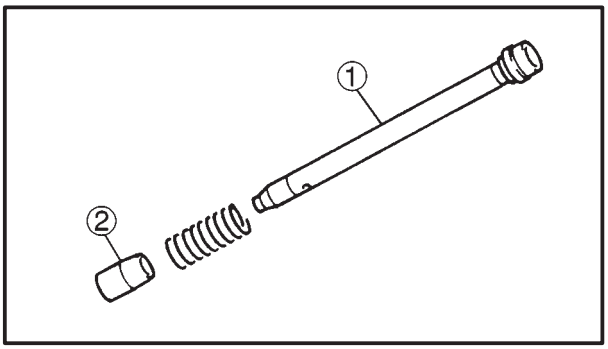

3. Check:
   - damper rod ①
     Damage/wear → Replace.
     Obstruction → Blow out all of the oil passages with compressed air.
   - oil flow stopper ②
     Damage → Replace.

CAUTION:

- **The front fork leg has a built-in damper adjusting rod and a very sophisticated internal construction, which are particularly sensitive to foreign material.**
- **When disassembling and assembling the front fork leg, do not allow any foreign material to enter the front fork.**

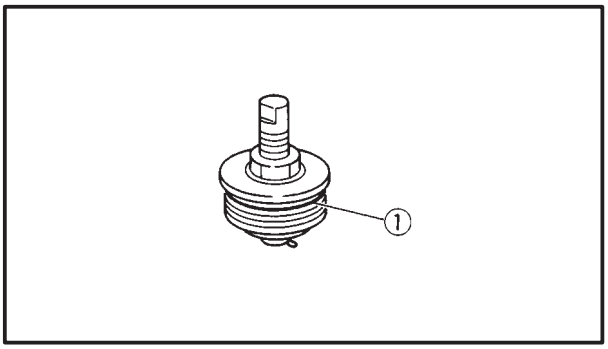

4. Check:
   - cap bolt O-ring ①
     Damage/wear → Replace.

EB703703

ASSEMBLING THE FRONT FORK LEGS

The following procedure applies to both of the front fork legs.

WARNING

- **Make sure that the oil levels in both front fork legs are equal.**
- **Uneven oil levels can result in poor handling and a loss of stability.**

NOTE:

- When assembling the front fork leg, be sure to replace the following parts:
  -inner tube bushing
  -outer tube bushing
  -oil seal
  -dust seal
- Before assembling the front fork leg, make sure that all of the components are clean.

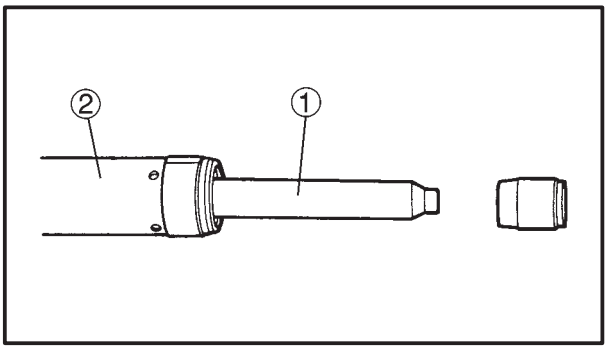

1. Install:
   - damper rod ①

CAUTION:

Allow the damper rod to slide slowly down the inner tube ② until it protrudes from the bottom of the inner tube. Be careful not to damage the inner tube.

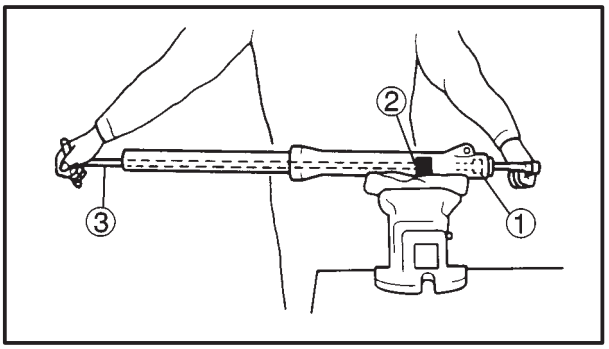

2. Lubricate:
   - inner tube's outer surface

Recommended lubricant
Yamaha fork and shock oil 10W or equivalent

3. Tighten:
   - damper rod bolt ①

Damper rod bolt
30 Nm (3.0 m•kg)
LOCTITE®

NOTE:

While holding the damper rod with the damper rod holder ② and T-handle ③, tighten the damper rod bolt.

Damper rod holder (30 mm)
90890-01327
T-handle
90890-01326

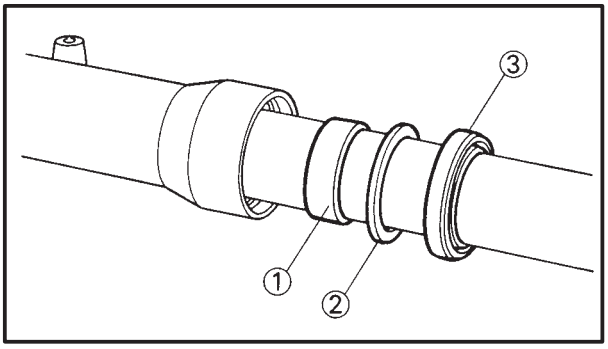

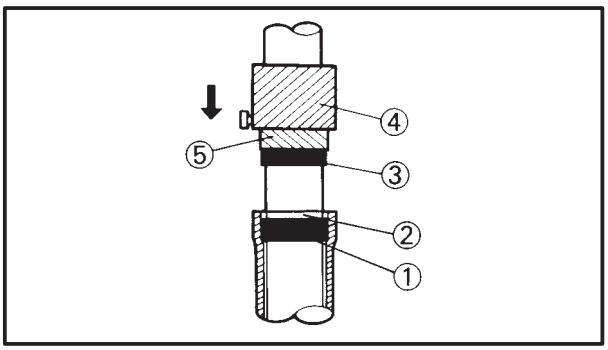

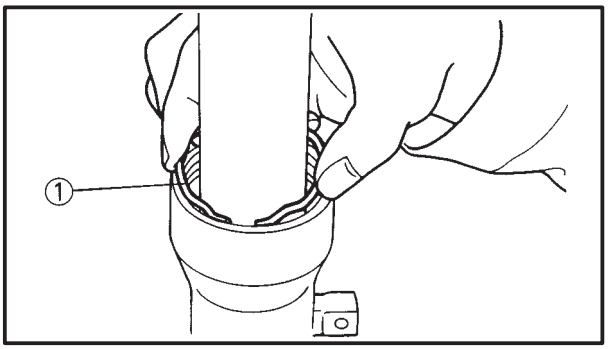

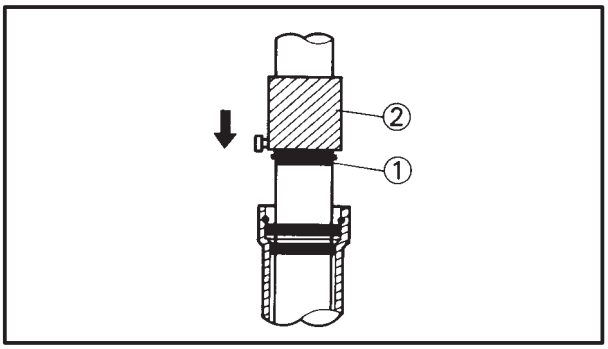

4. Install:
   - outer tube bushing ①
   - seal spacer ②
   - oil seal ③
     (with the fork seal driver weight ④ and adapter ⑤)

Fork seal driver weight
90890-01367
Adapter
90890-01374

CAUTION:

Make sure that the numbered side of the oil seal faces up.

NOTE:
- Before installing the oil seal, apply lithium soap base grease onto its lips.
- Apply fork oil onto the outer surface of the inner tube.

5. Install:
   - oil seal clip ①

NOTE:
Adjust the oil seal clip so that it fits into the outer tube groove.

6. Install:
   - dust seal ①
     (with the fork seal driver weight) ②

7. Fully compress the front fork leg.
8. Fill:
   - front fork leg
     (with the specified amount of the recommended fork oil)

Quantity (each front fork leg)
538 cm^3
Recommended oil
Fork oil 10w
or equivalent

CAUTION:

- **Be sure to use the recommended fork oil. Other oils may have an adverse effect on front fork performance.**
- **When disassembling and assembling the front fork leg, do not allow any foreign material to enter the front fork.**

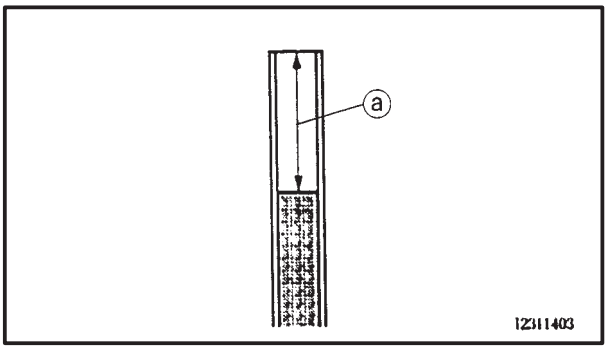

9. After filling up, slowly pump the fork up and down to distribute the fork oil
10. Measure:
    - Oil level ⓐ
      Out of specfication → Adjust.

Oil level:
137 mm
(from the top of the inner tube fully compressed and without the fork spring)

NOTE:
Hold the fork in an upright position.

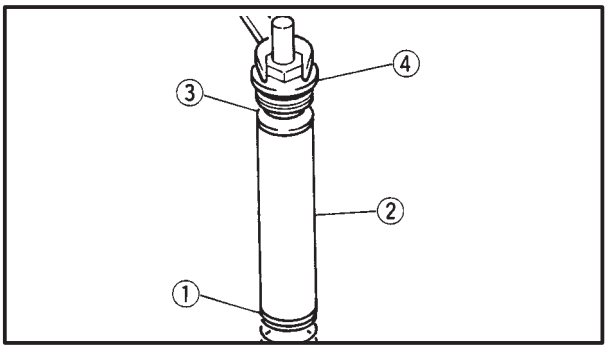

11. Install:
    - fork spring
    - spring seat ①
    - spacer ②
    - plate ③
    - cap bolt ④

NOTE:

- Install the fork spring with its smaller pitch upward.
- Before installing the cap bolt, apply grease to the O-ring.
- Temporarily tighten the cap bolt.

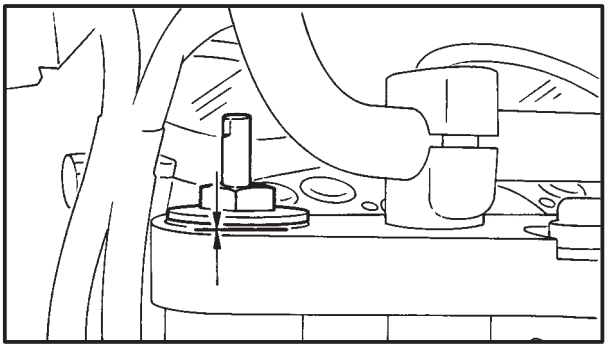

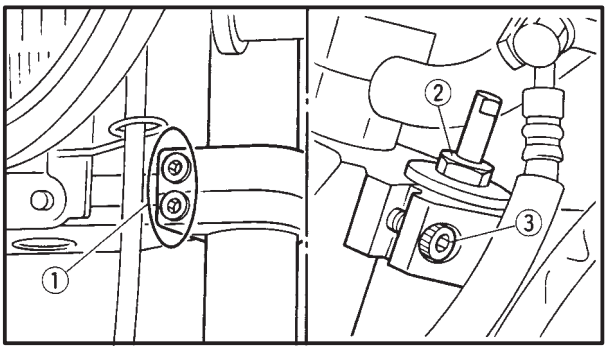

EAS00662

INSTALLING THE FRONT FORK LEGS

The following procedure applies to both of the front fork legs.

1. Install:
   - front fork leg
     Temporarily tighten the upper and lower bracket pinch bolts.

NOTE:

Make sure that the inner fork tube is flush with the top of the upper bracket.

2. Tighten:
   - lower bracket pinch bolt ①
   - cap bolt ②
   - upper bracket pinch bolt ③

Lower bracket pinch bolt
23 Nm (2.3 m•kg)
Cap bolt
23 Nm (2.3 m•kg)
Upper bracket pinch bolt
30 Nm (3.0 m•kg)

WARNING

Make sure that the brake hoses are routed properly.

3. Adjust:
   - spring preload adjusters (left and right)
     Refer to “ADJUSTING THE FRONT FORK LEGS” in chapter 3.

EAS00664
HANDLEBAR

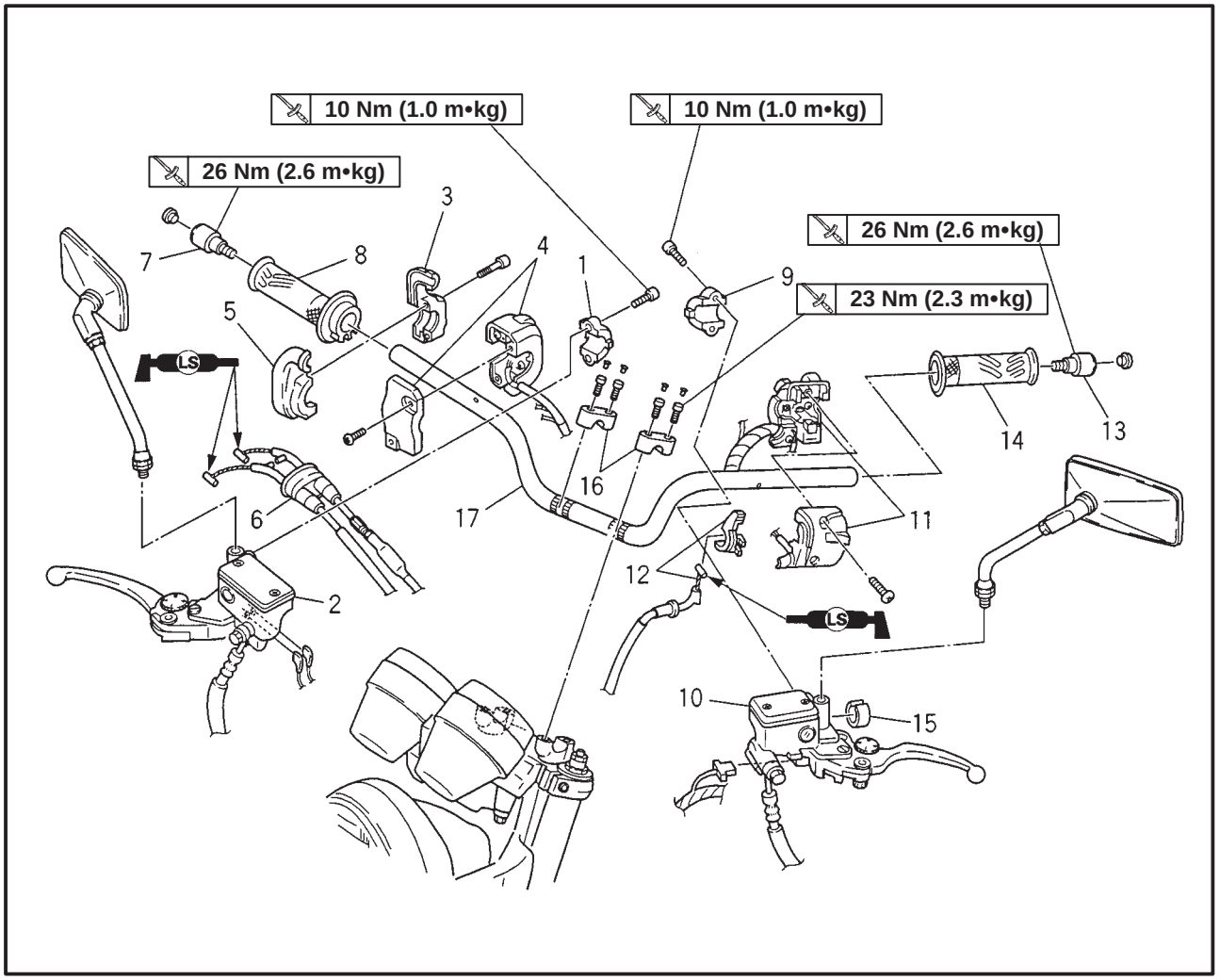

Order	Job/Part	Q'ty	Remarks
	Removing the handlebar		Remove the parts in the order listed.
1	Master cylinder bracket	1	
2	Master cylinder (front brake)	1	
3	Throttle cable housing	1	Refer to "REMOVING/INSTALLING THE HANDLEBAR".
4	Handlebar switch (right)	1	
5	Throttle cable housing	1	
6	Throttle cables	2	
7	Grip end (right)	1	Refer to "INSTALLING THE HANDLEBAR".
8	Throttle grip	1	
9	Master cylinder bracket	1	
10	Master cylinder (clutch)	1	
11	Handlebar switch (left)	1	
12	Starter lever/Starter cable	1/1	
13	Grip end (left)	1	Refer to "INSTALLING THE HANDLEBAR".

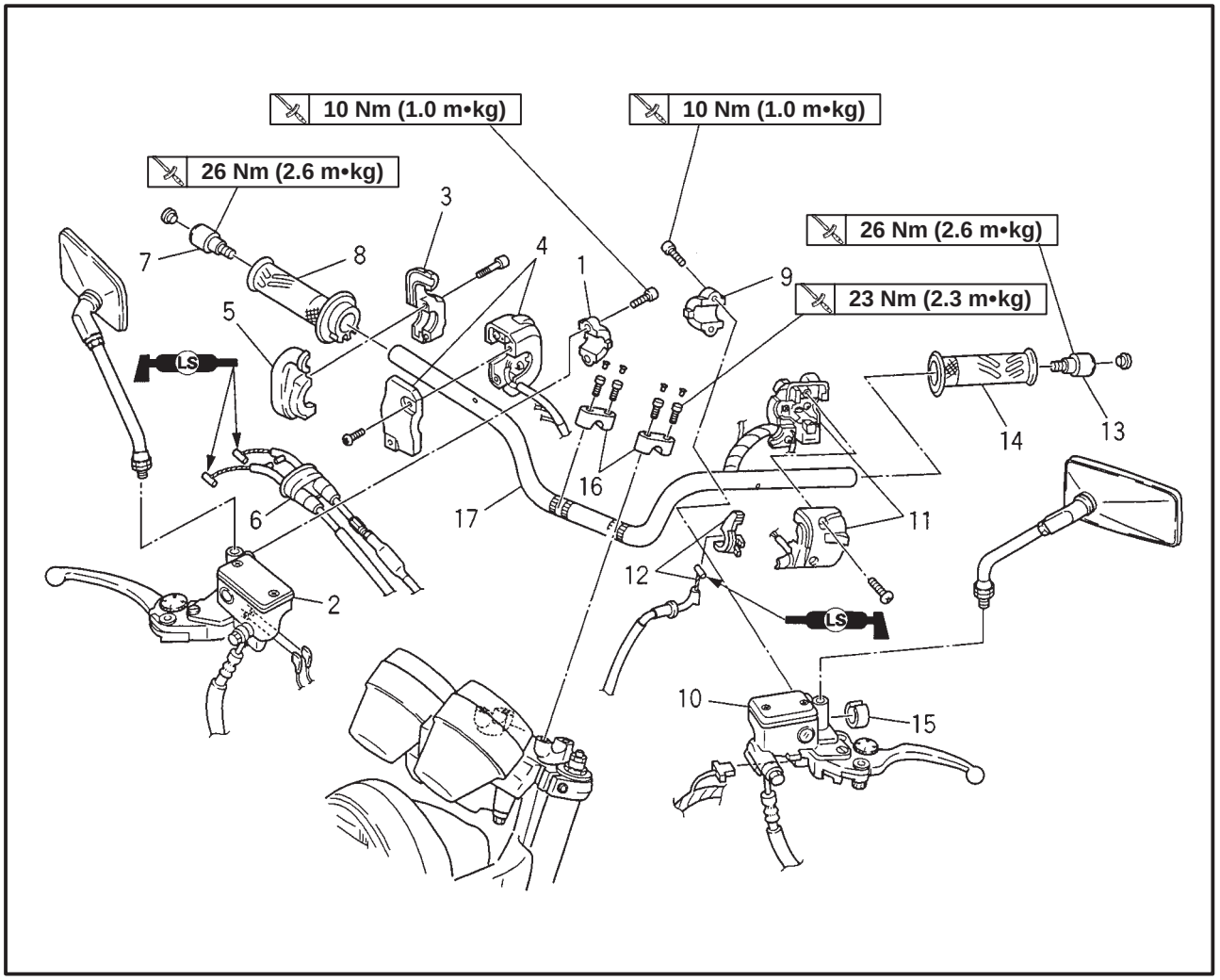

Order	Job/Part	Q'ty	Remarks
14	Handlebar grip	1	Refer to "REMOVING THE HANDLEBAR".
15	Collar	1	
16	Upper handlebar holders	2	Refer to "INSTALLING THE HANDLEBAR".
17	Handlebar	1	
			For installation, reverse the removal procedure.

EAS00666

REMOVING THE HANDLEBAR

1. Stand the motorcycle on a level surface.

WARNING

Securely support the motorcycle so that there is no danger of it falling over.

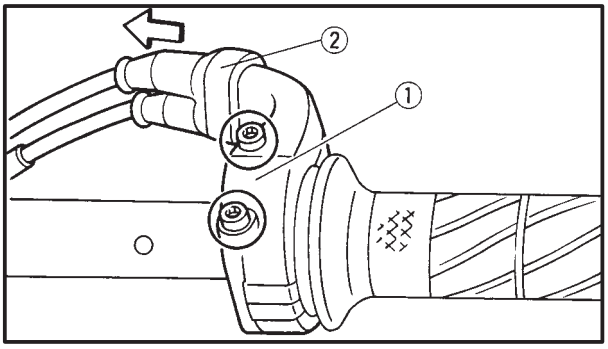

2. Remove:
   - throttle cable housing ①

NOTE:

While removing the throttle cable housing, pull back the rubber cover ②.

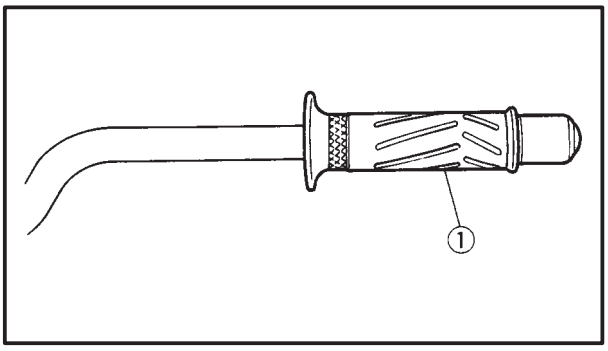

3. Remove:
   - handlebar grip (left) ①

NOTE:

Blow compressed air between the handlebar and the handlebar grip, and gradually push the grip off the handlebar.

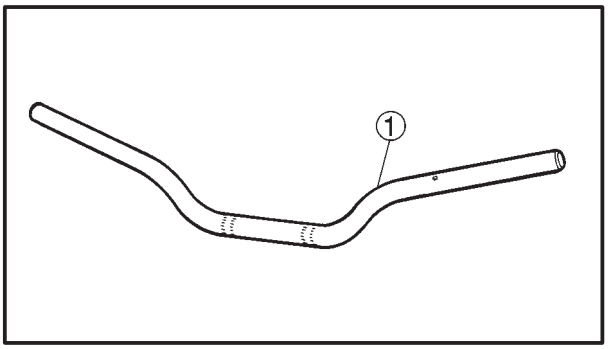

EAS00668

CHECKING THE HANDLEBAR

1. Stand the motorcycle on a level surface.

WARNING

Securely support the motorcycle so that there is no danger of it falling over.

2. Check:
   - handlebar ①
     Bends/cracks/damage → Replace.

WARNING

Do not attempt to straighten a bent handlebar as this may dangerously weaken it.

3. Install:
   - handlebar grip

▼▼▼▼▼▼▼▼▼▼▼▼▼▼▼▼▼▼▼▼▼▼▼▼▼▼▼▼▼▼▼▼

a. Apply a light coat of rubber adhesive onto the left end of the handlebar.
b. Slide the handlebar grip over the left end of the handlebar.
c. Wipe off any excess rubber adhesive with a clean rag.

⚠ WARNING

Do not touch the handlebar grip until the rubber adhesive has fully dried.

▲▲▲▲▲▲▲▲▲▲▲▲▲▲▲▲▲▲▲▲▲▲▲▲▲▲▲▲▲▲▲▲

EAS00671

INSTALLING THE HANDLEBAR

1. Stand the motorcycle on a level surface.

⚠ WARNING

Securely support the motorcycle so that there is no danger of it falling over.

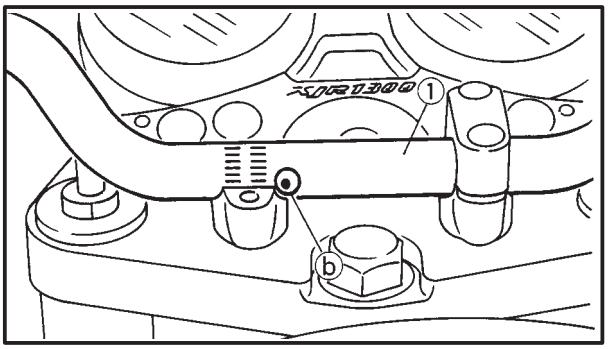

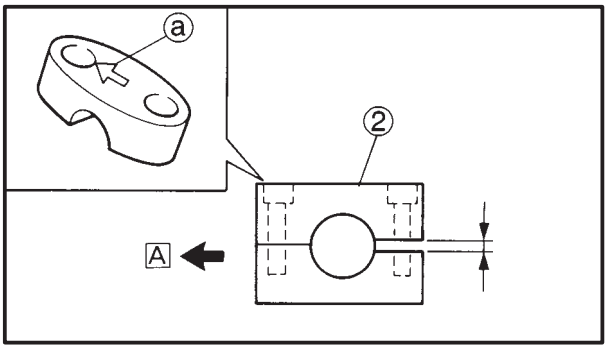

2. Install:
   - handlebar ①
   - upper handlebar holders ②

	Upper handlebar holder bolt 23 Nm (2.3 m•kg)

CAUTION:

- **First, tighten the bolts on the front side of the handlebar holder, then on the rear side.**
- **Turn the handlebar all the way to the left and right. If there is any contact with the fuel tank, adjust the handlebar position.**

NOTE:

- The upper handlebar holders should be installed with the arrows ⓐ facing forward A.
- Align the match marks ⓑ on the handlebar with the upper surface of the lower handlebar holders.

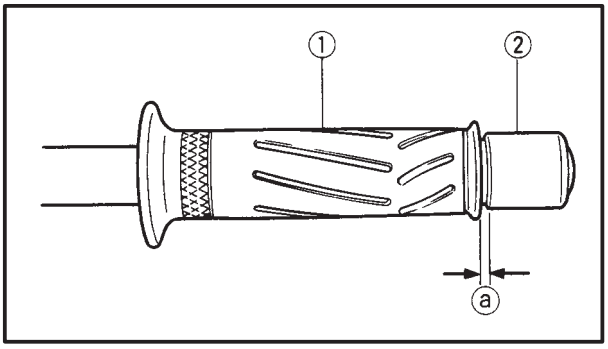

3. Install:
   - handlebar grip ①
   - left grip end ②

NOTE:

There should be 1 ~ 3 mm of clearance ⓐ between the handlebar grip and the left grip end.

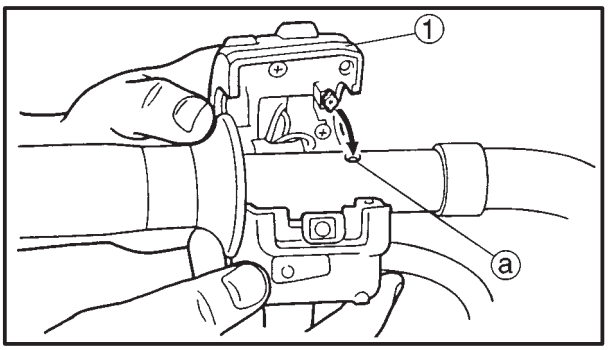

4. Install:
   - left handlebar switch ①

NOTE:

Align the pin on the left handlebar switch with the hole ⓐ in the handlebar.

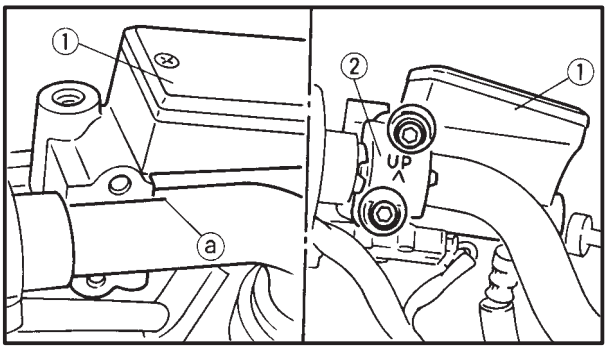

5. Install:
   - master cylinder (clutch) ①
   - master cylinder bracket ②

NOTE:

Align the mating surfaces of the master cylinder with the punch mark ⓐ on the handlebar.

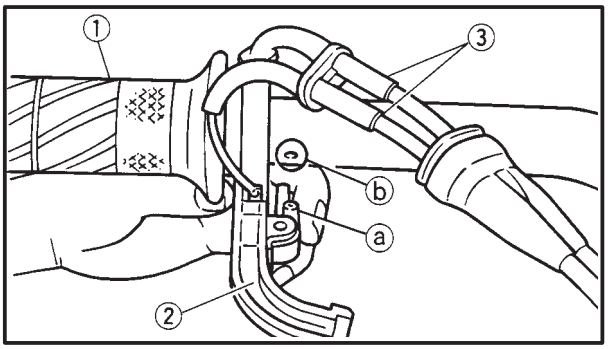

6. Install:
   - throttle grip ①
   - throttle cable housing ②
   - throttle cables ③

NOTE:

Apply a thin coat of lithium soap base grease onto the inside of the throttle grip and install it onto the handlebar.

⚠ WARNING

Make sure that the pin ⓐ on the throttle cable housing is aligned with the hole ⓑ in the handlebar.

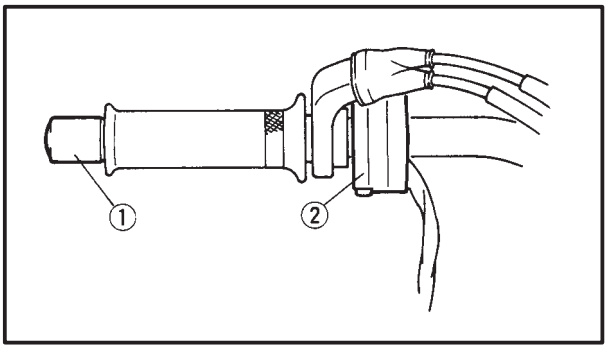

7. Install:
   - right grip end ①
   - right handlebar switch ②

⚠ WARNING

Make sure that the throttle grip operates smoothly.

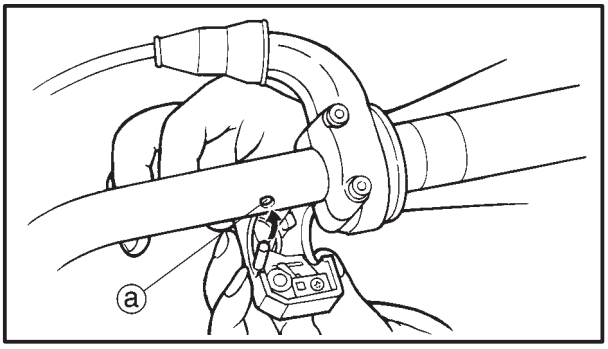

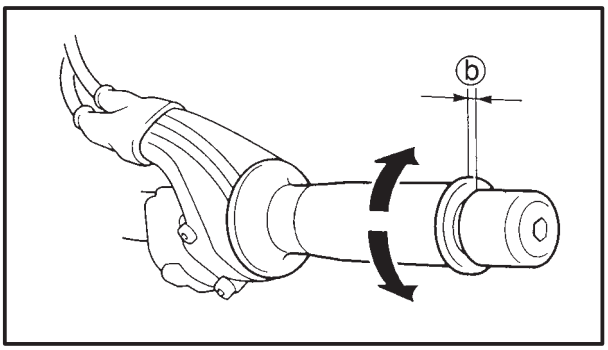

NOTE:

- Align the pin on the right handlebar switch with the hole ⓐ in the handlebar.
- There should be 1 ~ 3 mm of clearance ⓑ between the throttle grip and the right grip end.

8. Install:
   - master cylinder ass'y (front brake)
9. Adjust:
   - throttle cable free play
     Refer to "ADJUSTING THE THROTTLE CABLE FREE PLAY" in chapter 3.

Throttle cable free play (at the flange of the throttle grip)
3 ~ 5 mm

EAS00676

STEERING HEAD

LOWER BRACKET

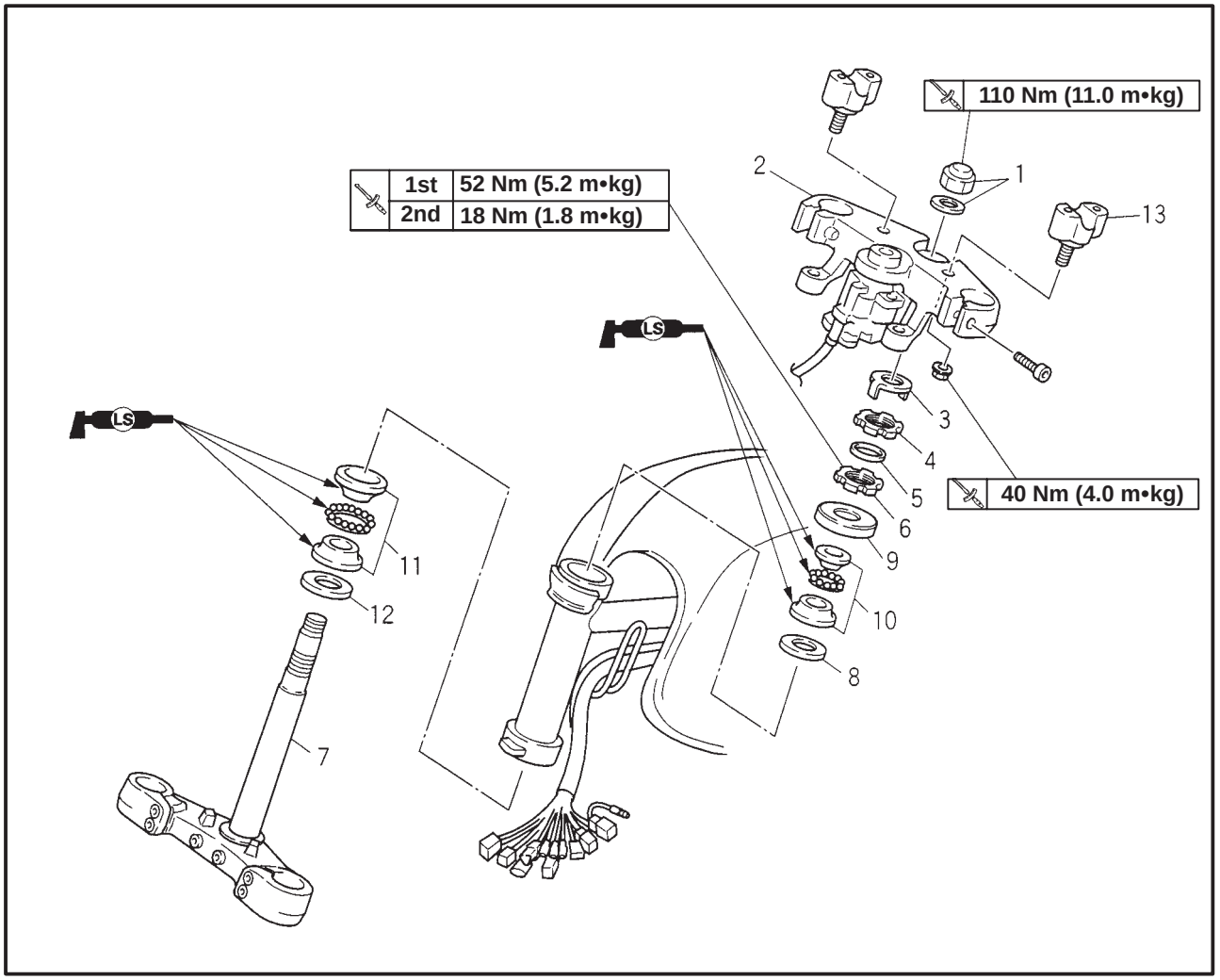

Order	Job/Part	Q'ty	Remarks
	Removing the lower bracket		Remove the parts in the order listed.
	Front wheel		Refer to "FRONT WHEEL AND BRAKE DISCS".
	Front fork		Refer to "FRONT FORK".
	Handlebar		Refer to "HANDLEBAR".
1	Steering stem nut/Washer	1/1	Refer to "INSTALLING THE STEERING HEAD".
2	Upper bracket	1	
3	Lock washer	1	
4	Upper ring nut	1	Refer to "REMOVING THE LOWER BRACKET/INSTALLING THE STEERING HEAD".
5	Rubber washer	1	
6	Lower ring nut	1	
7	Lower bracket	1	
8	Rubber seal	1	
9	Bearing cover	1	
10	Bearing	1	

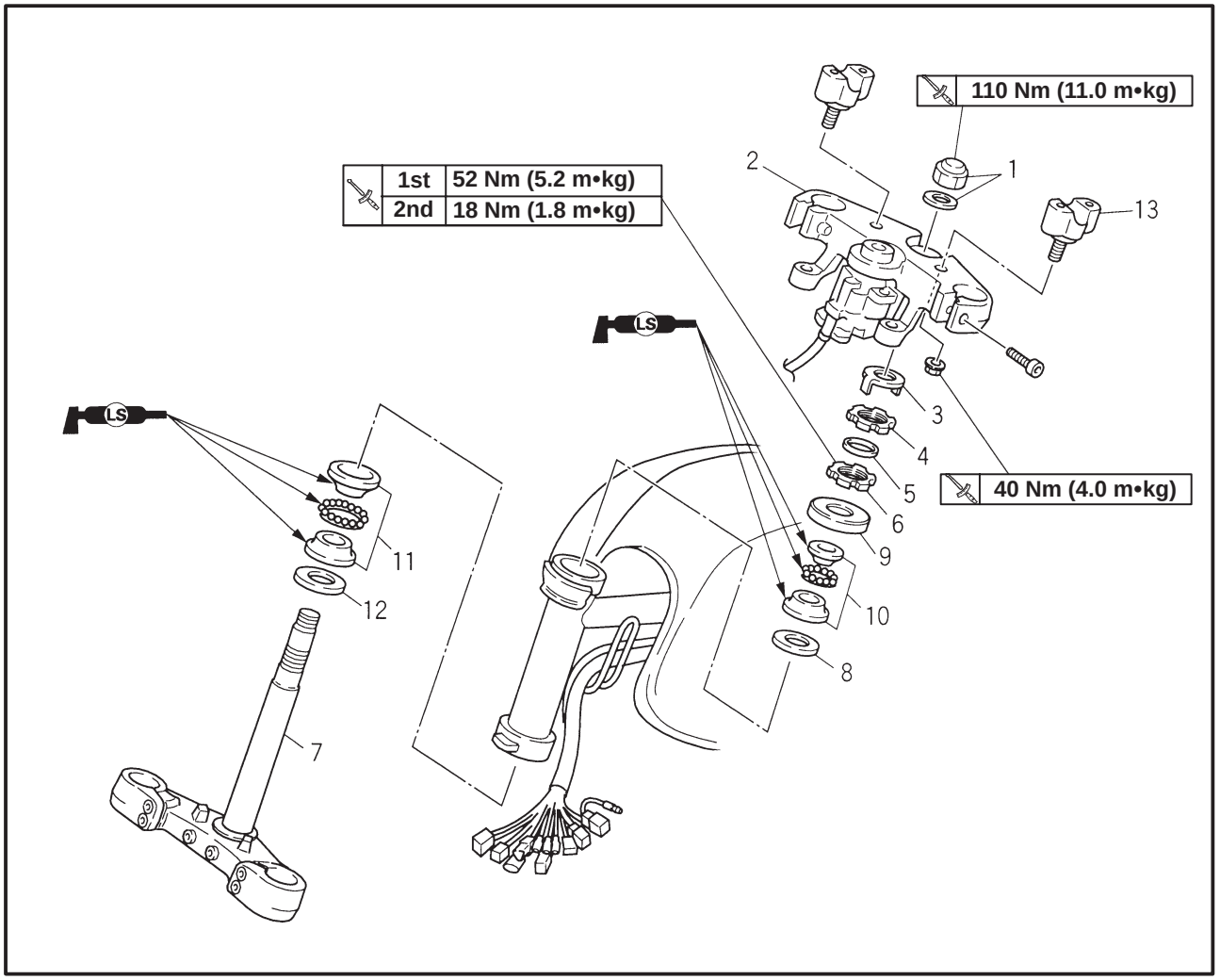

Order	Job/Part	Q'ty	Remarks
11	Bearing	1	
12	Dust seal	1	
13	Lower handlebar holders	2	
			For installation, reverse the removal procedure.

EAS00679

REMOVING THE LOWER BRACKET

1. Stand the motorcycle on a level surface.

WARNING

Securely support the motorcycle so that there is no danger of it falling over.

2. Remove:
   - upper ring nut ①
   - lower ring nut ②

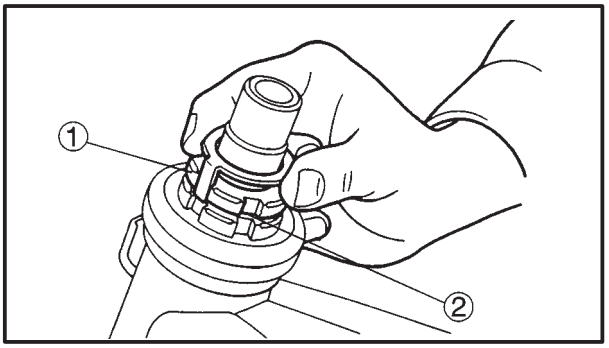

NOTE:

Hold the lower ring nut with the exhaust and steering nut wrench, then remove the upper ring nut with the ring nut wrench.

Exhaust and steering nut wrench
90890-01268
Ring nut wrench
90890-01403

WARNING

Securely support the lower bracket so that there is no danger of it falling.

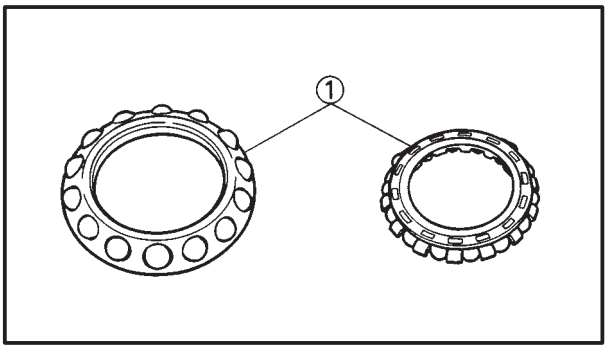

EAS00682

CHECKING THE STEERING HEAD

1. Wash:
   - bearing balls
   - bearing races

Recommended cleaning solvent
Kerosine

2. Check:
   - bearing balls ①
     Damage/pitting → Replace.
3. Replace:
   - bearing balls
   - bearing races

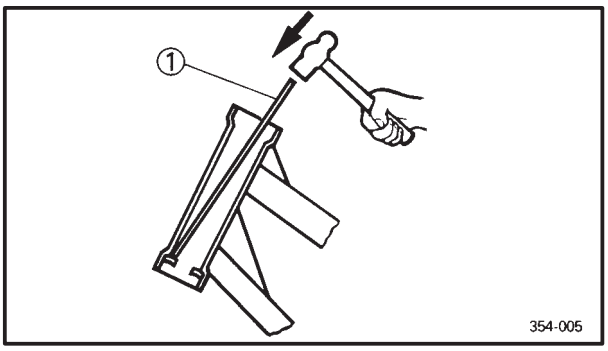

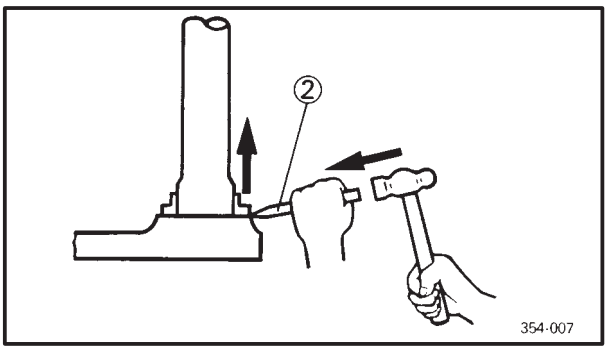

a. Remove the bearing races from the steering head pipe with a long rod ① and hammer.
b. Remove the bearing race from the lower bracket with a floor chisel ② and hammer.
c. Install a new dust seal and new bearing races.

CAUTION:

If the bearing race is not installed properly, the steering head pipe could be damaged.

NOTE:

- Always replace the bearing balls and bearing races as a set.
- Whenever the steering head is disassembled, replace the dust seal.

4. Check:
   - upper bracket
   - lower bracket
     (along with the steering stem)
     Bends/cracks/damage → Replace.

EAS00683

INSTALLING THE STEERING HEAD

1. Lubricate:
   - upper bearing
   - lower bearing
   - bearing races

	Recommended lubricant **Lithium soap base grease**

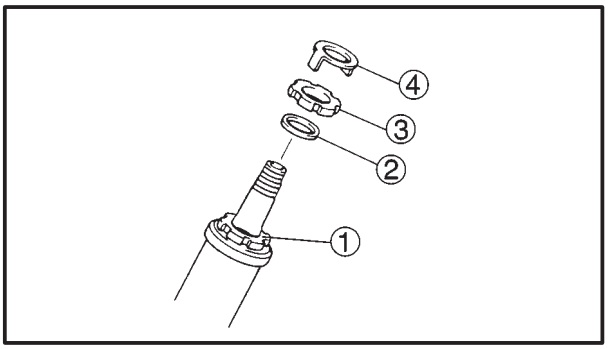

2. Install:
   - lower ring nut ①
   - rubber washer ②
   - upper ring nut ③
   - lock washer ④
     Refer to “INSPECTING THE STEERING HEAD” in chapter 3.
3. Install:
   - upper bracket
   - steering stem nut

NOTE:

Temporarily tighten the steering stem nut.

4. Install:
   - front fork legs
     Refer to “FRONT FORK”.

NOTE:

Temporarily tighten the upper and lower bracket pinch bolts.

REAR SHOCK ABSORBER, SWINGARM AND DRIVE CHAIN

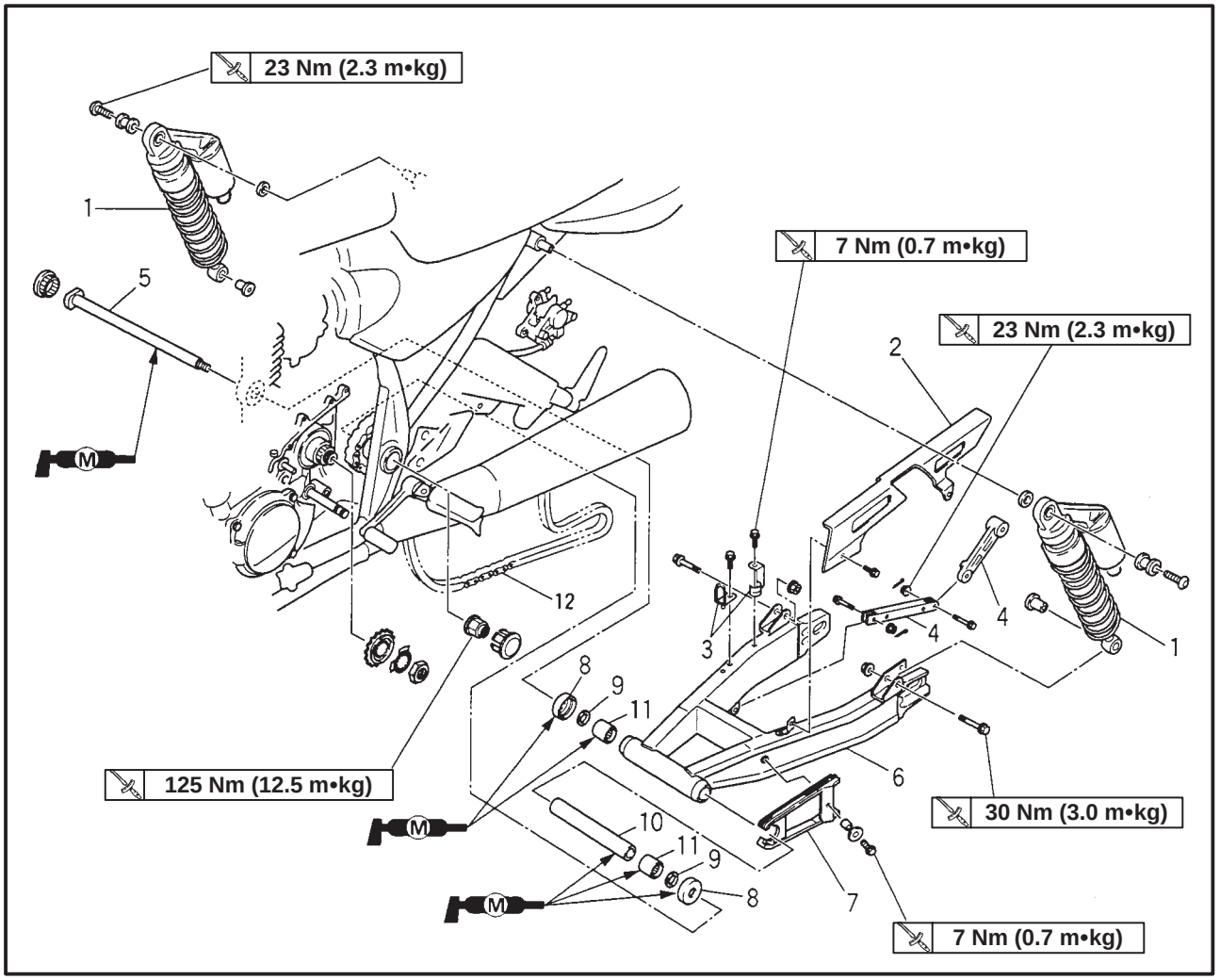

Order	Job/Part	Q'ty	Remarks
	Removing the rear shock absorber, swingarm and drive chain.		Remove the parts in the order listed.
	Rear wheel		Refer to "REAR WHEEL, BRAKEDISC AND REAR WHEEL SPROCKET".
	Drive sprocket		Refer to "ENGINE" in chapter 4.
1	Rear shock absorber (left/right)	1	
2	Chain case	1	
3	Brake hose holders	2	
4	Tension bar/Caliper bracket	1/1	
5	Pivot shaft	1	
6	Swingarm	1	Refer to "REMOVING THE SWINGARM".
7	Drive chain guide	1	
8	Dust covers	2	
9	Washers	2	
10	Bush	1	

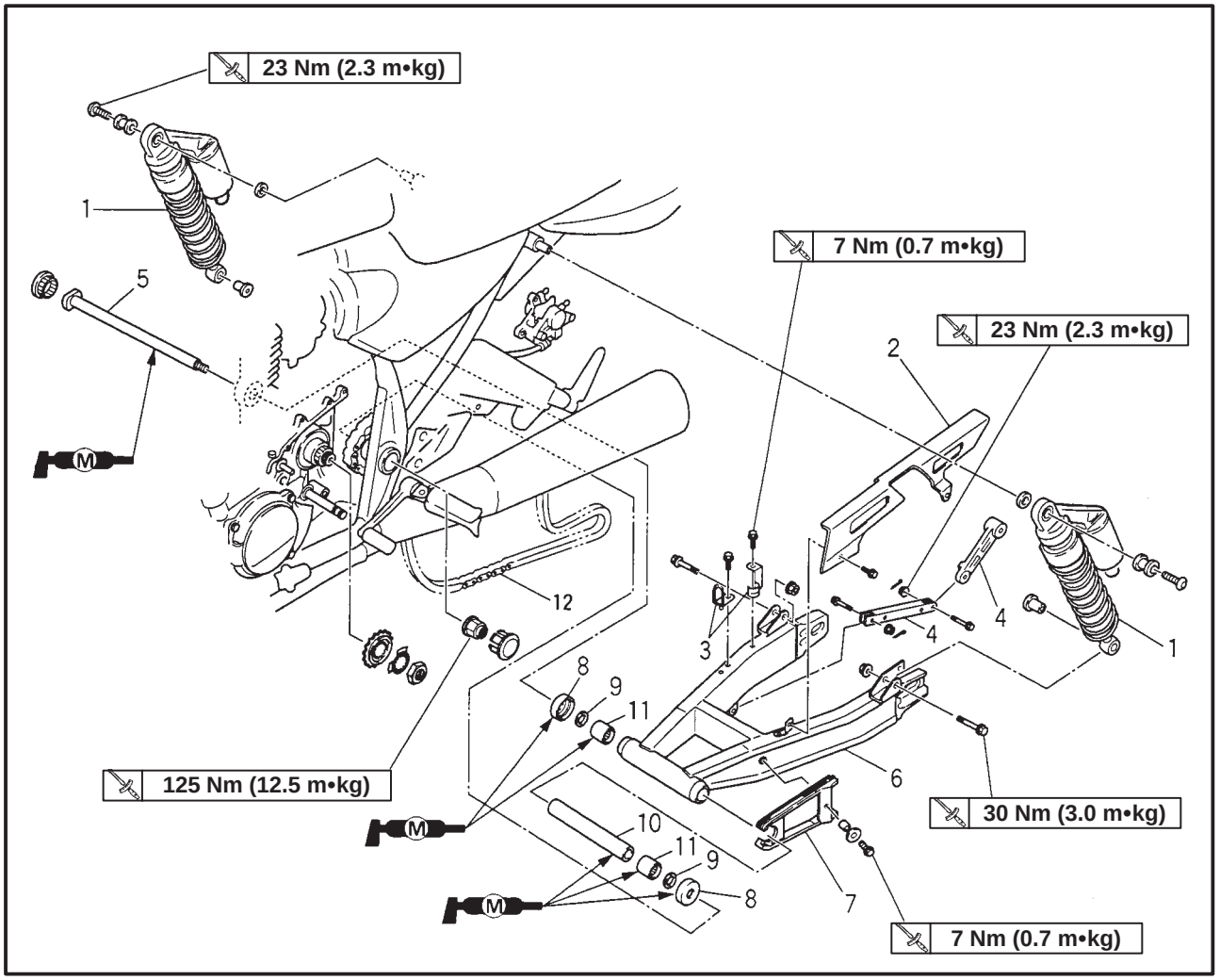

Order	Job/Part	Q'ty	Remarks
11	Bearings	2	
12	Drive chain	1	
			For installation, reverse the removal procedure.

EAS00687

HANDLING THE REAR SHOCK ABSORBER AND GAS CYLINDER

WARNING

This rear shock absorber and gas cylinder contain highly compressed nitrogen gas. Before handling the rear shock absorber or gas cylinder, read and make sure you understand the following information. The manufacturer cannot be held responsible for property damage or personal injury that may result from improper handling of the rear shock absorber and gas cylinder.

- **Do not tamper or attempt to open the rear shock absorber or gas cylinder.**
- **Do not subject the rear shock absorber or gas cylinder to an open flame or any other source of high heat. High heat can cause an explosion due to excessive gas pressure.**
- **Do not deform or damage the rear shock absorber or gas cylinder in any way. If the rear shock absorber, gas cylinder or both are damaged, damping performance will suffer.**

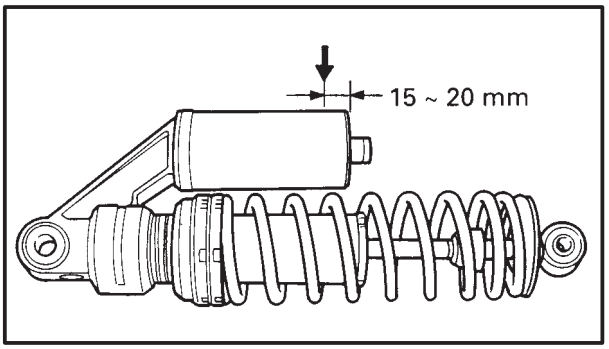

EAS00689

DISPOSING OF A REAR SHOCK ABSORBER AND GAS CYLINDER

a. Gas pressure must be released before disposing of a rear shock absorber and gas cylinder. To release the gas pressure, drill a 2 ~ 3 mm hole through the gas cylinder at a point 15 ~ 20 mm from its end as shown.

WARNING

Wear eye protection to prevent eye damage from released gas or metal chips.

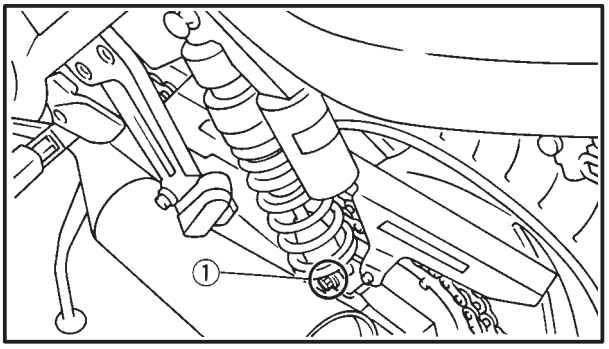

EAS00703

REMOVING THE SWINGARM

1. Stand the motorcycle on a level surface.

WARNING

Securely support the motorcycle so that there is no danger of it falling over.

NOTE:

Place the motorcycle on a suitable stand so that the rear wheel is elevated.

2. Remove:
   - rear shock absorber assembly lower bolt ①

NOTE:

When removing the rear shock absorber assembly lower bolt, hold the swingarm so that it does not drop down.

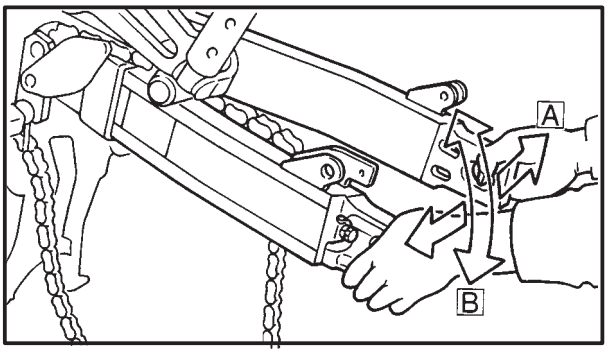

3. Check:
   - swingarm side play
   - swingarm vertical movement

▼▼▼▼▼▼▼▼▼▼▼▼▼▼▼▼▼▼▼▼▼▼▼▼▼▼▼▼▼▼▼▼

a. Check the tightening torque of the pivot shaft nut.

	Pivot shaft nut **125 Nm (12.5 m•kg)**

b. Check the swingarm side play [A] by moving the swingarm from side to side.

c. If the swingarm side play is out of specification, check the spacers, bearings, washers, and dust covers.

	Swingarm side play (at the en of the swingarm) **0 mm**

d. Check the swingarm vertical movement [B] by moving the swingarm up and down.
   If swingarm vertical movement is not smooth of if there is binding, check the spacers, bearings, washers, and dust covers.

▲▲▲▲▲▲▲▲▲▲▲▲▲▲▲▲▲▲▲▲▲▲▲▲▲▲▲▲▲▲▲▲

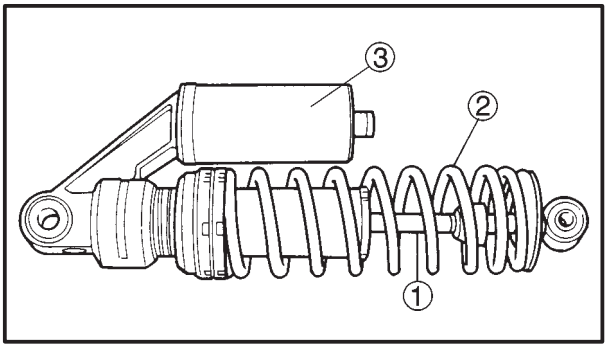

EAS00696

CHECKING THE REAR SHOCK ABSORBER ASSEMBLY AND GAS CYLINDER

1. Check:
   - rear shock absorber rod ①
     Bends/damage → Replace the rear shock absorber assembly.
   - rear shock absorber
     Gas leaks/oil leaks → Replace the rear shock absorber assembly.
   - spring ②
     Damage/wear → Replace the rear shock absorber assembly.
   - gas cylinder ③
     Damage/gas leaks → Replace.
   - bushings
     Damage/wear → Replace.
   - dust seals
     Damage/wear → Replace.
   - bolts
     Bends/damage/wear → Replace.

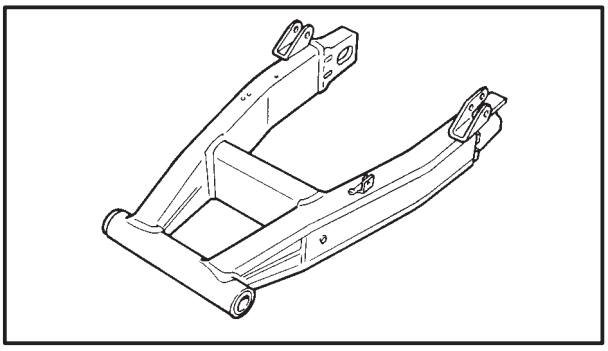

EAS00707

CHECKING THE SWINGARM

1. Check:
   - swingarm
     Bends/cracks/damage → Replace.

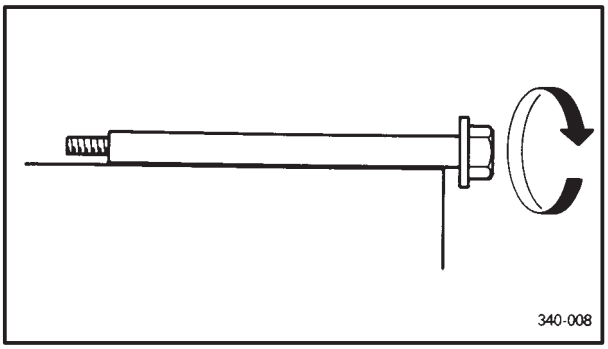

2. Check:
   - pivot shaft
     Roll the pivot shaft on a flat surface.
     Bends → Replace.

⚠ WARNING

Do not attempt to straighten a bent pivot shaft.

3. Wash:
   - pivot shaft
   - dust covers
   - spacer
   - washers
   - bearings

	Recommended cleaning solvent **Kerosine**

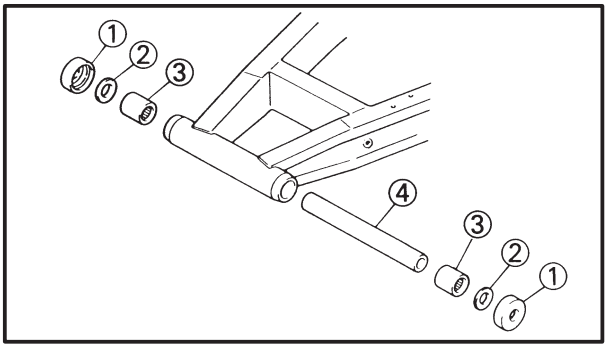

4. Check:
   - dust covers ①
   - washers ②
     Damage/Wear → Replace.
   - bearings ③
     Damage/Pitting → Replace.
   - bush ④
     Damage/Scratches → Replace.

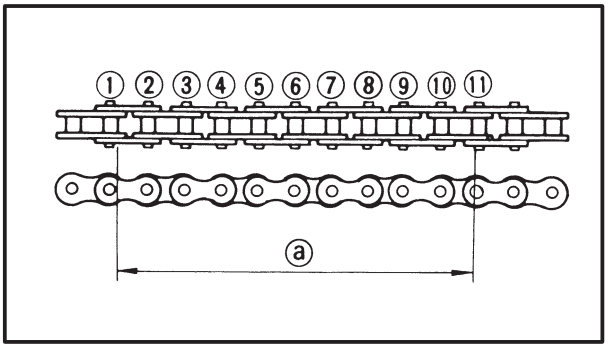

EAS00709

CHECKING THE DRIVE CHAIN

1. Measure:
   - ten-link section ⓐ of the drive chain
     Out of specification → Replace the drive chain.

Ten-link drive chain section limit (maximum)
150 mm

NOTE:

- While measuring the ten-link section, push down on the drive chain to increase its tension.
- Measure the length between drive chain roller ① and ⑪ as shown.
- Perform this measurement at two or three different places.

2. Check:
   - drive chain
     Stiffness → Clean and lubricate or replace.
3. Clean:
   - drive chain

▼▼▼▼▼▼▼▼▼▼▼▼▼▼▼▼▼▼▼▼▼▼▼▼▼▼▼▼▼▼▼▼

a. Wipe the drive chain with a clean cloth.
b. Put the drive chain in kerosine and remove any remaining dirt.
c. Remove the drive chain from the kerosine and completely dry it.

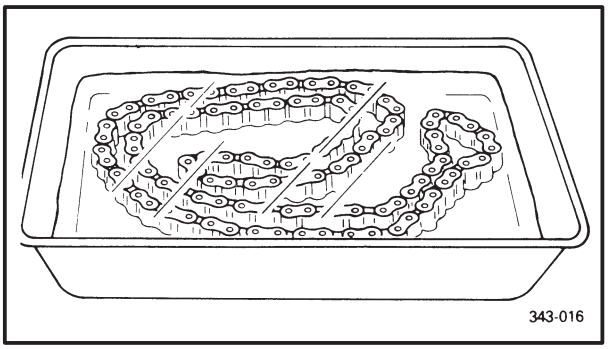

CAUTION:

This motorcycle has a drive chain with small rubber O-rings ① between the drive chain side plates. Never use high-pressure water or air, steam, gasoline, certain solvents (e.g., benzine), or a coarse brush to clean the drive chain. High-pressure methods could force dirt or water into the drive chain's internals, and solvents will deteriorate the O-rings. A coarse brush can also damage the O-rings. Therefore, use only kerosine to clean the drive chain.

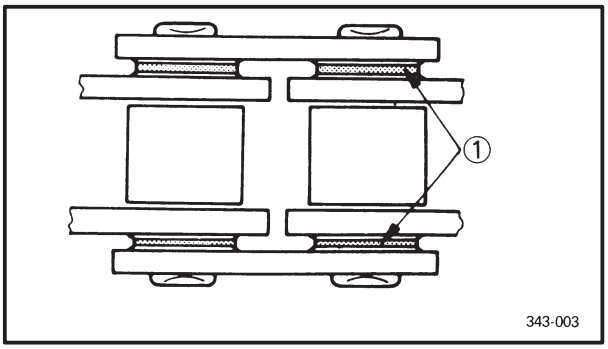

▲▲▲▲▲▲▲▲▲▲▲▲▲▲▲▲▲▲▲▲▲▲▲▲▲▲▲▲▲▲▲▲

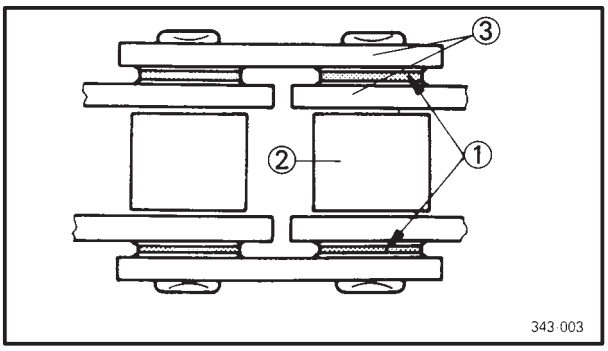

4. Check:
   - O-rings ①
     Damage → Replace the drive chain.
   - drive chain rollers ②
     Damage/wear → Replace the drive chain.
   - drive chain side plates ③
     Damage/wear → Replace the drive chain.
     Cracks → Replace the drive chain and make sure that the battery breather hose is properly routed away from the drive chain and below the swingarm.
5. Lubricate:
   - drive chain

Recommended lubricant
Engine oil or chain lubricant suitable for O-ring chains

6. Check:
   - drive sprocket
   - rear wheel sprocket
     More than 1/4 tooth ⓐ wear → Replace the drive chain sprockets as a set.
     Bent teeth → Replace the drive chain sprockets as a set.

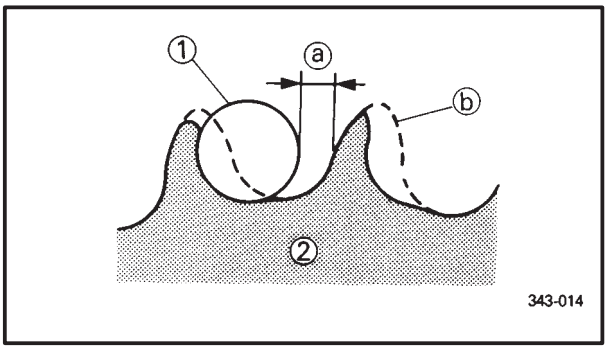

ⓑ Correct
① Drive chain roller
② Drive chain sprocket

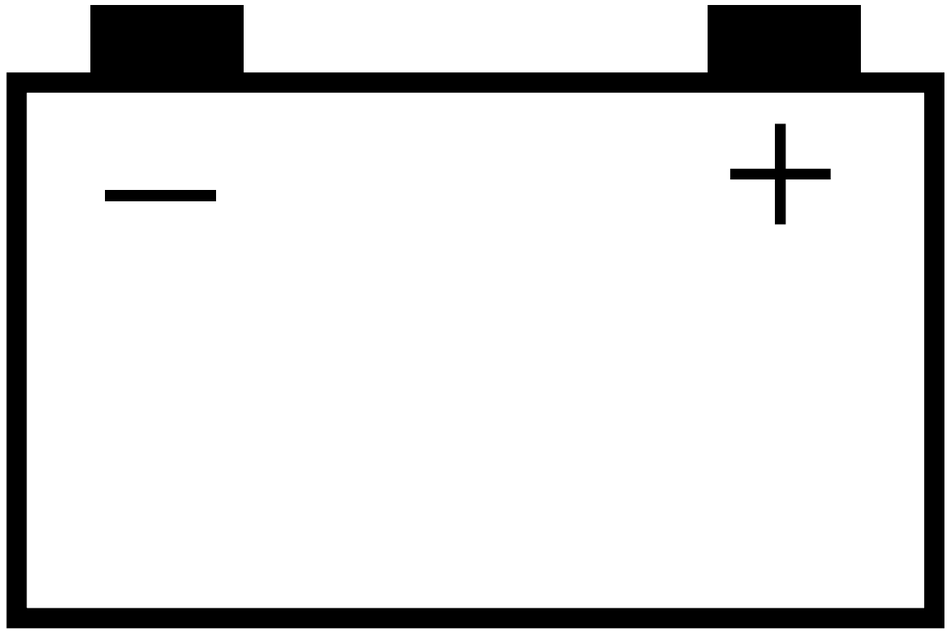

ELEC 7

CHAPTER 7.
ELECTRICAL

ELECTRICAL COMPONENTS 7-1

SWITCHES 7-2
CHECKING SWITCH CONTINUITY 7-2

CHECKING THE SWITCHES 7-3

CHECKING THE BULBS AND BULB SOCKETS 7-5
TYPES OF BULBS 7-5
CHECKING THE CONDITION OF THE BULBS 7-5
CHECKING THE CONDITION OF THE BULB SOCKETS 7-7

IGNITION SYSTEM 7-8
CIRCUIT DIAGRAM 7-8
TROUBLESHOOTING 7-9

ELECTRIC STARTING SYSTEM 7-13
CIRCUIT DIAGRAM 7-13
STARTING CIRCUIT CUTOFF SYSTEM OPERATION 7-14
TROUBLESHOOTING 7-15
STARTER MOTOR 7-19

CHARGING SYSTEM 7-22
CIRCUIT DIAGRAM 7-22
TROUBLESHOOTING 7-23
A.C. GENERATOR 7-26

LIGHTING SYSTEM 7-27
CIRCUIT DIAGRAM 7-27
TROUBLESHOOTING 7-28
CHECKING THE LIGHTING SYSTEM 7-29

SIGNALING SYSTEM 7-32
CIRCUIT DIAGRAM 7-32
TROUBLESHOOTING 7-33
CHECKING THE SIGNALING SYSTEM 7-34

SELF-DIAGNOSIS 7-41
TROUBLESHOOTING 7-42

EAS00729

ELECTRICAL

ELECTRICAL COMPONENTS

① Main switch
② Fuel sender
③ Starter relay
④ Starting circuit cutoff relay
⑤ Battery
⑥ Oil level relay
⑦ Flasher relay
⑧ Ignitior unit
⑨ Neutral switch
⑩ Sidestand switch
⑪ Rear brake switch
⑫ Oil level switch
⑬ Horns
⑭ Ignition coils

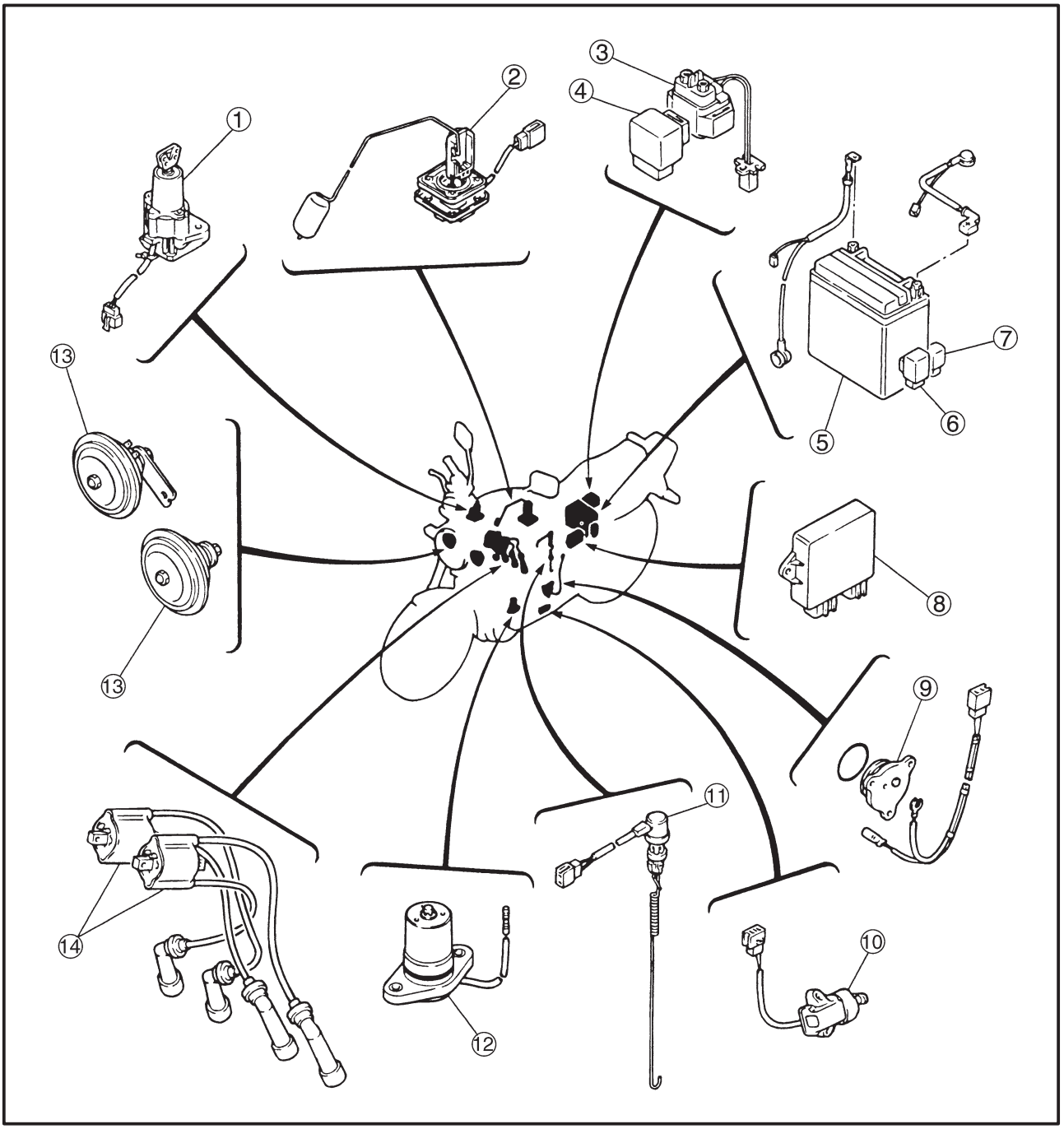

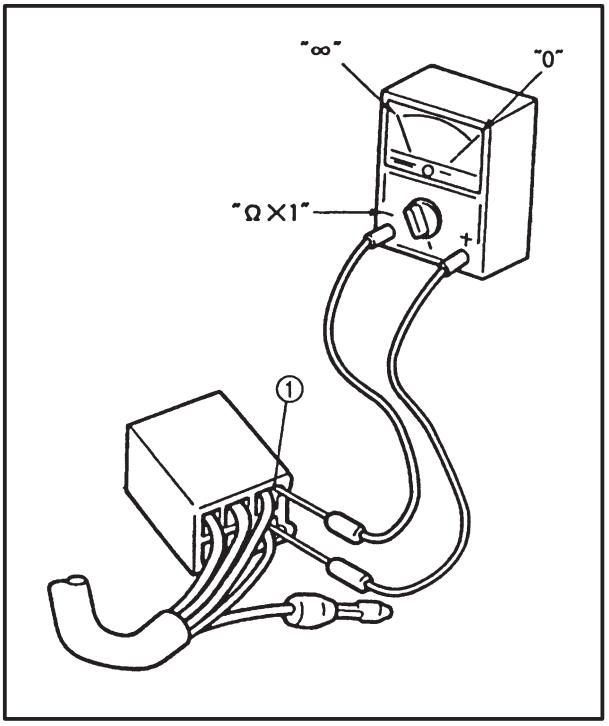

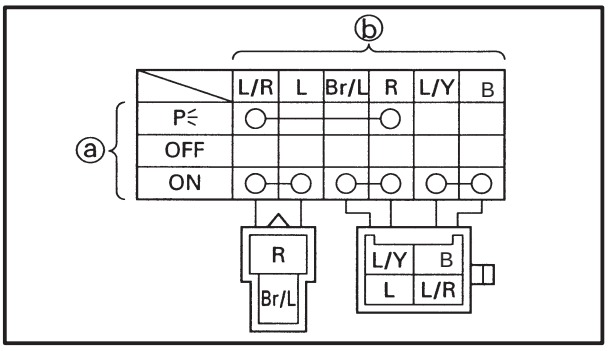

EAS0010

SWITCHES

CHECKING SWITCH CONTINUITY

Check each switch for continuity with the pocket tester. If the continuity reading is incorrect, check the wiring connections and if necessary, replace the switch.

CAUTION:

Never insert the tester probes into the coupler terminal slots ①. Always insert the probes from the opposite end of the coupler, taking care not to loosen or damage the leads.

Pocket tester
90890-03112

NOTE:

- Before checking for continuity, set the pocket tester to "0" and to the "Ω × 1" range.
- When checking for continuity, switch back and forth between the switch positions a few times.

The terminal connections for switches (e.g., main switch, engine stop switch) are shown in an illustration similar to the one on the left.
The switch positions ⓐ are shown in the far left column and the switch lead colors ⓑ are shown in the top row in the switch illustration.

NOTE:

"○——○" indicates a continuity of electricity between switch terminals (i.e., a closed circuit at the respective switch position).

The example illustration on the left shows that:

There is continuity between blue/red and red when the switch is set to "P≤".
There is continuity between blue/red and blue, between brown/blue and red, and between blue/yellow and black when the switch is set to "ON".

EAS00731

CHECKING THE SWITCHES

Check each switch for damage or wear, proper connections, and also for continuity between the terminals. Refer to “CHECKING SWITCH CONTINUITY”.

Damage/wear → Repair or replace the switch.
Improperly connected → Properly connect.
Incorrect continuity reading → Replace the switch.

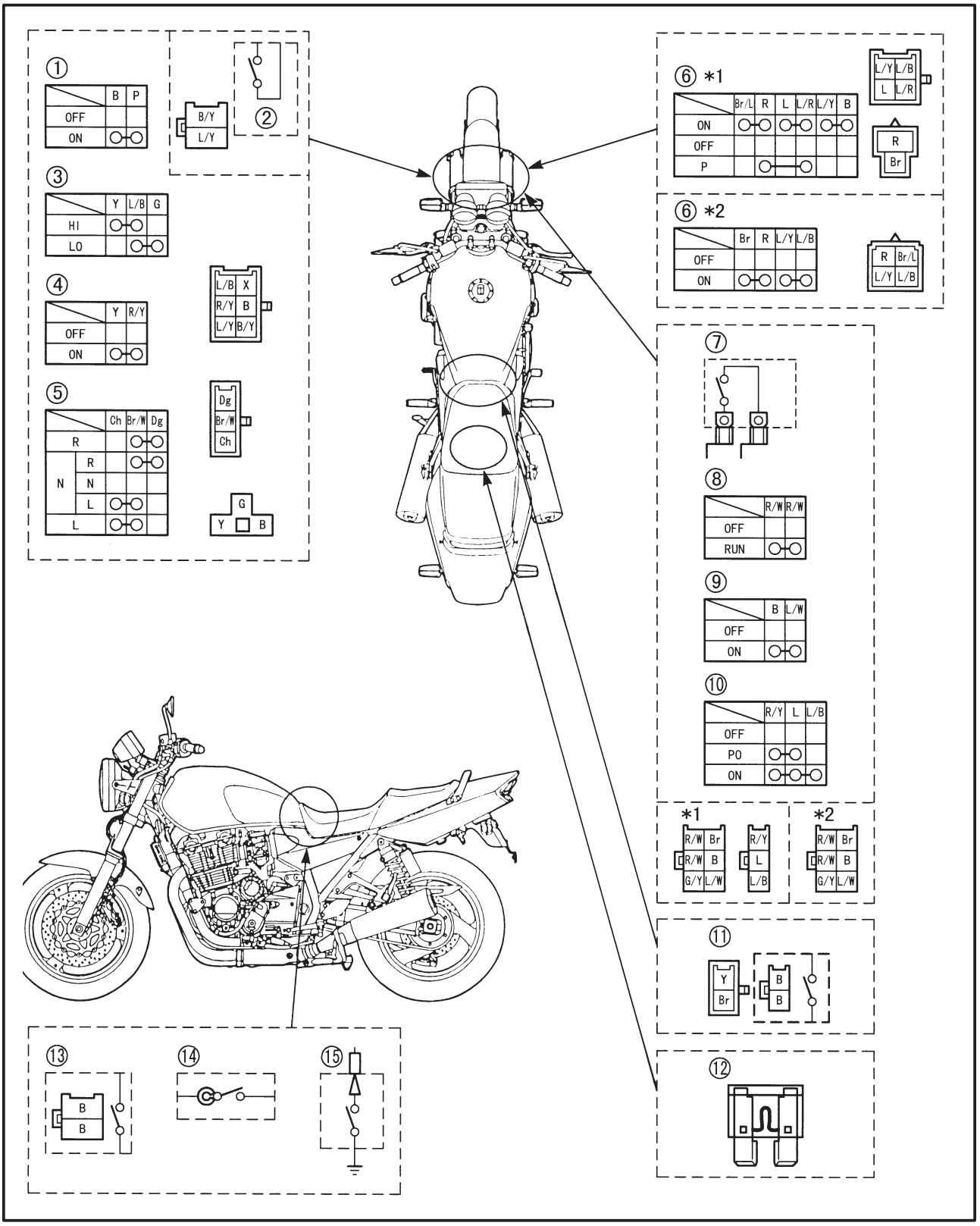

① Horn switch
② Clutch switch
③ Dimmer switch
④ Pass switch
⑤ Turn signal switch
⑥ Main switch
⑦ Front brake switch
⑧ Engine stop switch
⑨ Start switch
⑩ Lights switch (for Europe)
⑪ Rear brake switch
⑫ Fuse
⑬ Side stand switch
⑭ Neutral switch
⑮ Oil level switch
*1: for Europe
*2: for AUS

EAS00732

CHECKING THE BULBS AND BULB SOCKETS

Check each bulb and bulb socket for damage or wear, proper connections, and also for continuity between the terminals.
Damage/wear → Repair or replace the bulb, bulb socket or both.
Improperly connected → Properly connect.
Incorrect continuity reading → Repair or replace the bulb, bulb socket or both.

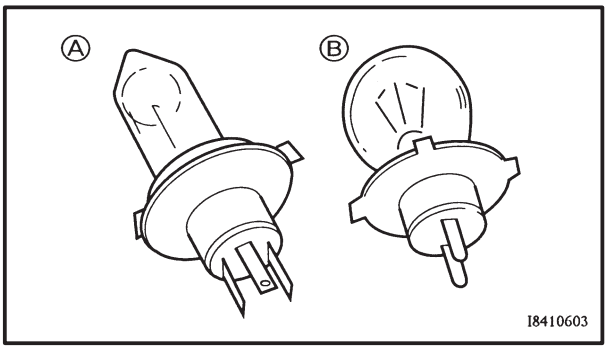

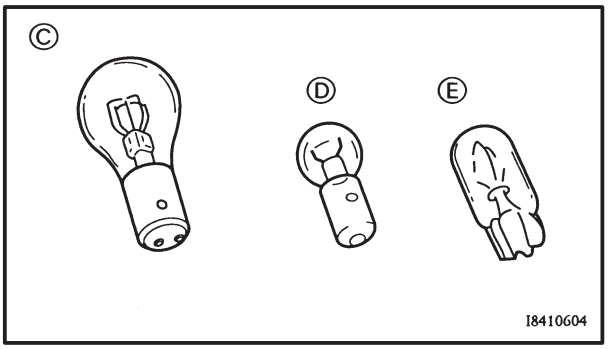

TYPES OF BULBS

The bulbs used on this motorcycle are shown in the illustration on the left.

- Bulbs Ⓐ and Ⓑ are used for headlights and usually use a bulb holder which must be detached before removing the bulb. The majority of these bulbs can be removed from their respective socket by turning them counterclockwise.
- Bulb Ⓒ is used for turn signal and tail/brake lights and can be removed from the socket by pushing and turning the bulb counterclockwise.
- Bulbs Ⓓ and Ⓔ are used for meter and indicator lights and can be removed from their respective socket by carefully pulling them out.

CHECKING THE CONDITION OF THE BULBS

The following procedure applies to all of the bulbs.

1. Remove:
   - bulb

CHECKING THE BULBS AND BULB SOCKETS

WARNING

Since the headlight bulb gets extremely hot, keep flammable products and your hands away from the bulb until it has cooled down.

CAUTION:

- **Be sure to hold the socket firmly when removing the bulb. Never pull the lead, otherwise it may be pulled out of the terminal in the coupler.**
- **Avoid touching the glass part of the headlight bulb to keep it free from oil, otherwise the transparency of the glass, the life of the bulb and the luminous flux will be adversely affected. If the headlight bulb gets soiled, thoroughly clean it with a cloth moistened with alcohol or lacquer thinner.**

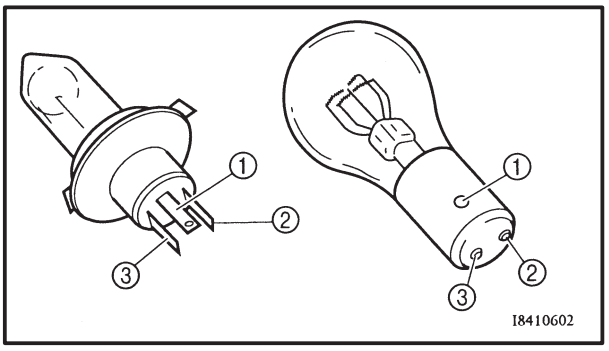

2. Check:
   - bult (for continuity)
     (with the pocket tester)
     No continuity → Replace.

	Pocket tester **90890-03112**

NOTE:

Before checking for continuity, set the pocket tester to “0” and to the “Ω × 1” range.

a. Connect the tester positive probe to terminal ① and the tester negative probe to terminal ②, and check the continuity.
b. Connect the tester positive probe to terminal ① and the tester negative probe to terminal ③, and check the continuity.
c. If either of the readings indicate no continuity, replace the bulb.

CHECKING THE CONDITION OF THE BULB SOCKETS

The following procedure applies to all of the bulb sockets.

1. Check:
   - bulb socket (for continuity)
     (with the pocket tester)
     No continuity → Replace.

	Pocket tester **90890-03112**

NOTE:

Check each bulb socket for continuity in the same manner as described in the bulb section; however, note the following.

a. Install a good bulb into the bulb socket.
b. Connect the pocket tester probes to the respective leads of the bulb socket.
c. Check the bulb socket for continuity.
   If any of the readings indicate no continuity, replace the bulb socket.

EAS00735

IGNITION SYSTEM

CIRCUIT DIAGRAM

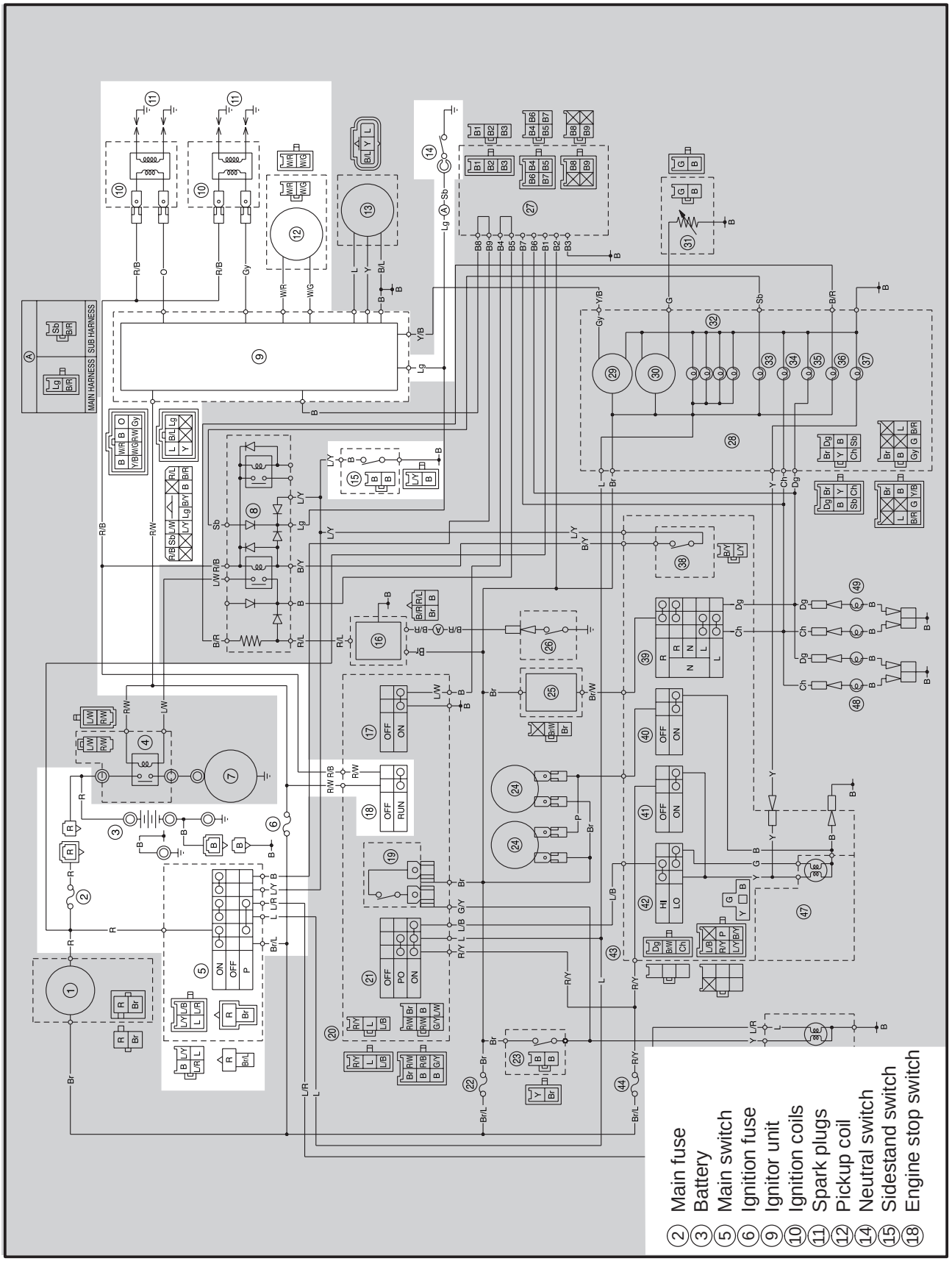

EAS00737

TROUBLESHOOTING

The ignition system fails to operate (no spark or intermittent spark).

Check:
1. main and ignition fuses
2. battery
3. spark plugs
4. ignition spark gap
5. spark plug cap resistance
6. ignition coil resistance
7. pickup coil resistance
8. main switch
9. engine stop switch
10. neutral switch
11. sidestand switch
12. wiring
    (of the entire ignition system)

NOTE:
- Before troubleshooting, remove the following part(-s):
1) seat
2) fuel tank
3) headlight unit
4) side cover (left)
- Troubleshoot with the following special tool(-s).

Ignition checker
90890-06754
Pocket tester
90890-03112

EAS00738

1. Main and ignition fuses

- Check the main and ignition fuses for continuity.
  Refer to “CHECKING THE FUSES” in chapter 3.
- Are the main and ignition fuses OK?

YES → NO → Replace the fuse(-s).

EAS00739

2. Battery

- Check the condition of the battery.
  Refer to “CHECKING AND CHARGING THE BATTERY” in chapter 3.

Min. open-circuit voltage
12.8 V or more at 20°C

- Is the battery OK?

YES → NO →
- Clean the battery terminals.
- Recharge or replace the battery.

EAS00741

3. Spark plugs

The following procedure applies to all of the spark plugs.
- Check the condition of the spark plug.
- Check the spark plug type.
- Measure the spark plug gap.
  Refer to “CHECKING THE SPARK PLUGS” in chapter 3.

Standard spark plug
DPR 8EA-9 (NGK)
X24EPR-U9 (DENSO)
Spark plug gap
0.8 ~ 0.9 mm

- Is the spark plug in good condition, is it of the correct type, and its gap within specification?

YES → NO → Re-gap or replace the spark plug.

EAS00743

4. Ignition spark gap

The following procedure applies to all of the spark plugs.
- Disconnect the spark plug cap from the spark plug.
- Connect the ignition checker ① as shown.
- ② Spark plug cap
- Set the main switch to “ON”.
- Measure the ignition spark gap ⓐ.
- Crank the engine by pushing the start switch and gradually increase the spark gap until a misfire occurs.

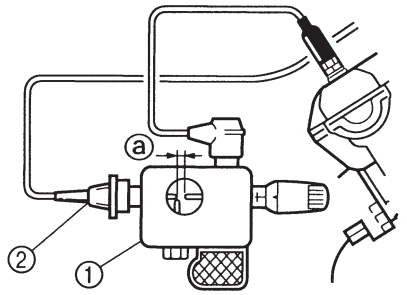

Min. ignition spark gap
6 mm

- Is there a spark and is the spark gap within specification?

NO → The ignition system is OK.

YES →

EAS00745

5. Spark plug cap resistance

The following procedure applies to all of the spark plug caps.
- Disconnect the spark plug cap from the spark plug.
- Connect the pocket tester (Ω × 1k) to the spark plug cap as shown.
- Measure the spark plug cap resistance.

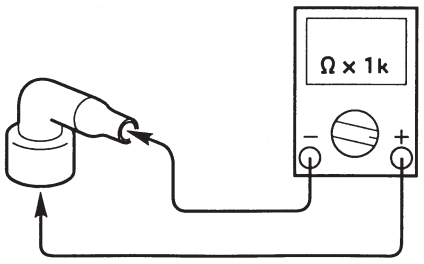

Spark plug cap resistance
10 kΩ at 20°C

- Is the spark plug cap OK?

YES →

NO → Replace the spark plug cap.

EAS00747

6. Ignition coil resistance

The following procedure applies to all of the ignition coils.
- Disconnect the ignition coil connectors from the ignition coil terminals.
- Connect the pocket tester (Ω × 1) to the ignition coil as shown.

Tester positive probe → red/black
Tester negative probe → orange (gray)

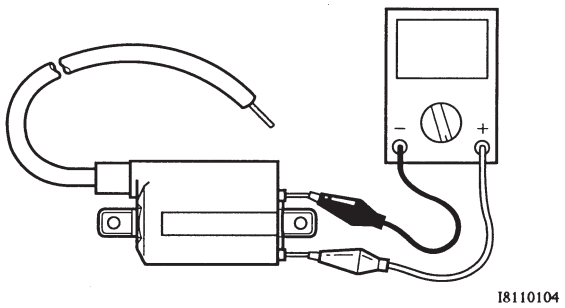

- Measure the primary coil resistance.

Primary coil resistance
1.9 ~ 2.9 Ω at 20°C

- Connect the pocket tester (Ω × 1k) to the ignition coil as shown.
- Measure the secondary coil resistance.

Tester positive probe → spark plug lead ①
Tester negative probe → spark plug lead ②

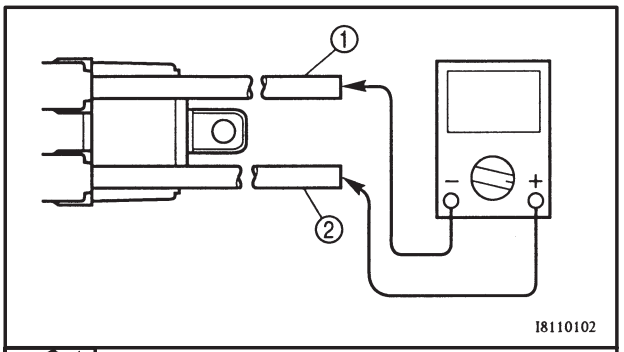

Secondary coil resistance
9.5 ~ 14.3 kΩ at 20°C

- Is the ignition coil OK?

YES → NO → Replace the ignition coil.

EAS00748

7. Pickup coil resistance

- Disconnect the pickup coil coupler from the wire harness.
- Connect the pocket tester (Ω × 100) to the pickup coil terminal.

Tester positive probe → white/red ①
Tester negative probe → white/green ②

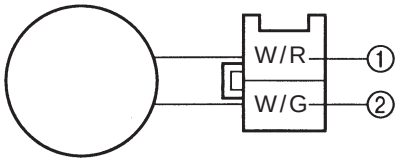

- Measure the pickup coil resistance.

Pickup coil resistance
248 ~ 372 Ω at 20°C
(between white/red and white/green)

- Is the pickup coil OK?

YES → NO → Replace the pickup coil.

EAS00749

8. Main switch

- Check the main switch for continuity. Refer to "CHECKING THE SWITCHES".
- Is the main switch OK?

YES → NO → Replace the main switch.

EAS00750

9. Engine stop switch

- Check the engine stop switch for continuity. Refer to "CHECKING THE SWITCHES".
- Is the engine stop switch OK?

YES → NO → Replace the right handlebar switch.

EAS00751

10. Neutral switch

- Check the neutral switch for continuity. Refer to "CHECKING THE SWITCHES".
- Is the neutral switch OK?

YES → NO → Replace the neutral switch.

EAS00752

11. Sidestand switch

- Check the sidestand switch for continuity. Refer to "CHECKING THE SWITCHES".
- Is the sidestand switch OK?

YES → NO → Replace the side-stand switch.

EAS00754

13. Wiring

- Check the entire ignition system's wiring. Refer to "CIRCUIT DIAGRAM".
- Is the ignition system's wiring properly connected and without defects?

NO → Properly connect or repair the ignition system's wiring.

YES → Replace the ignitor unit.

EAS00755

ELECTRIC STARTING SYSTEM

CIRCUIT DIAGRAM

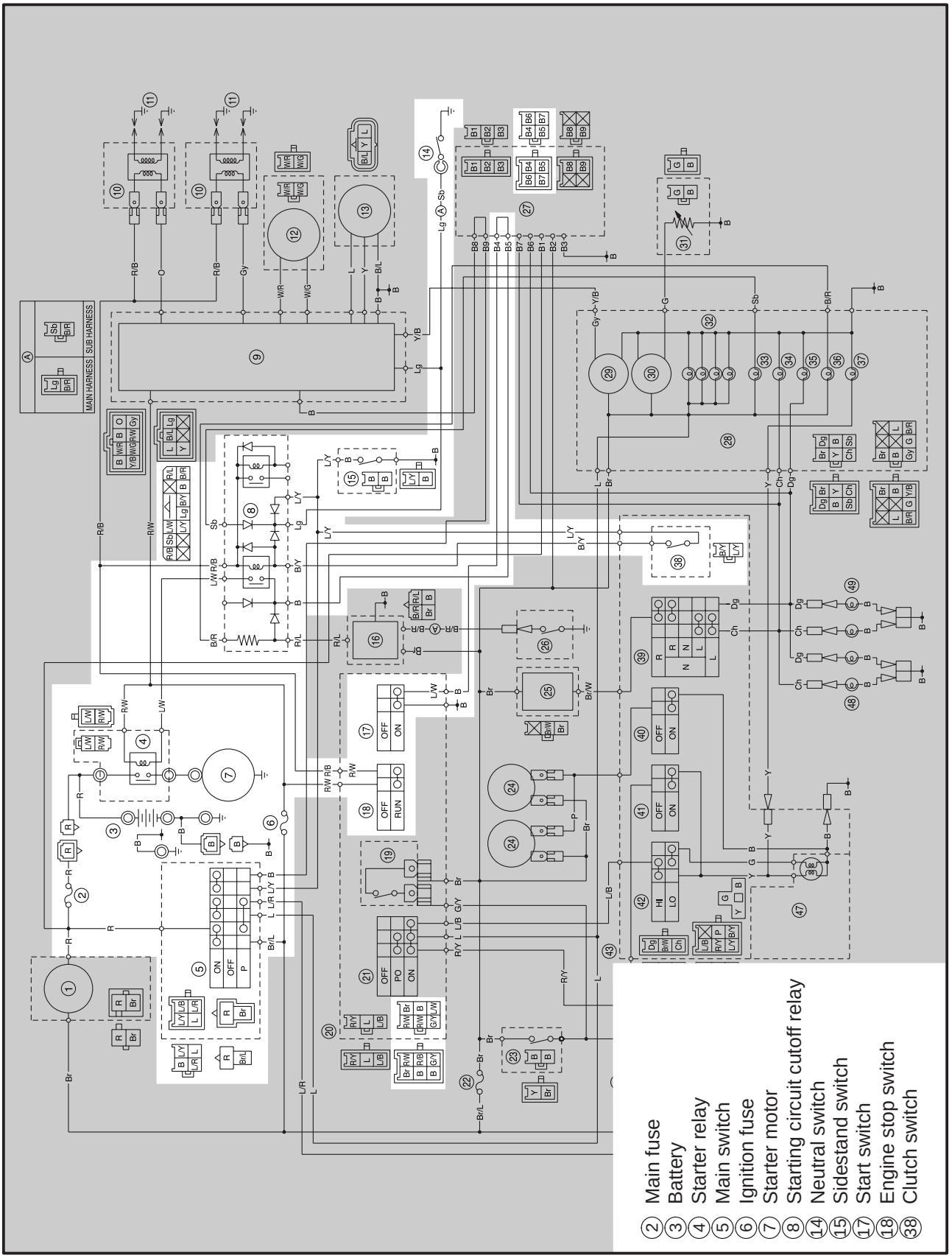

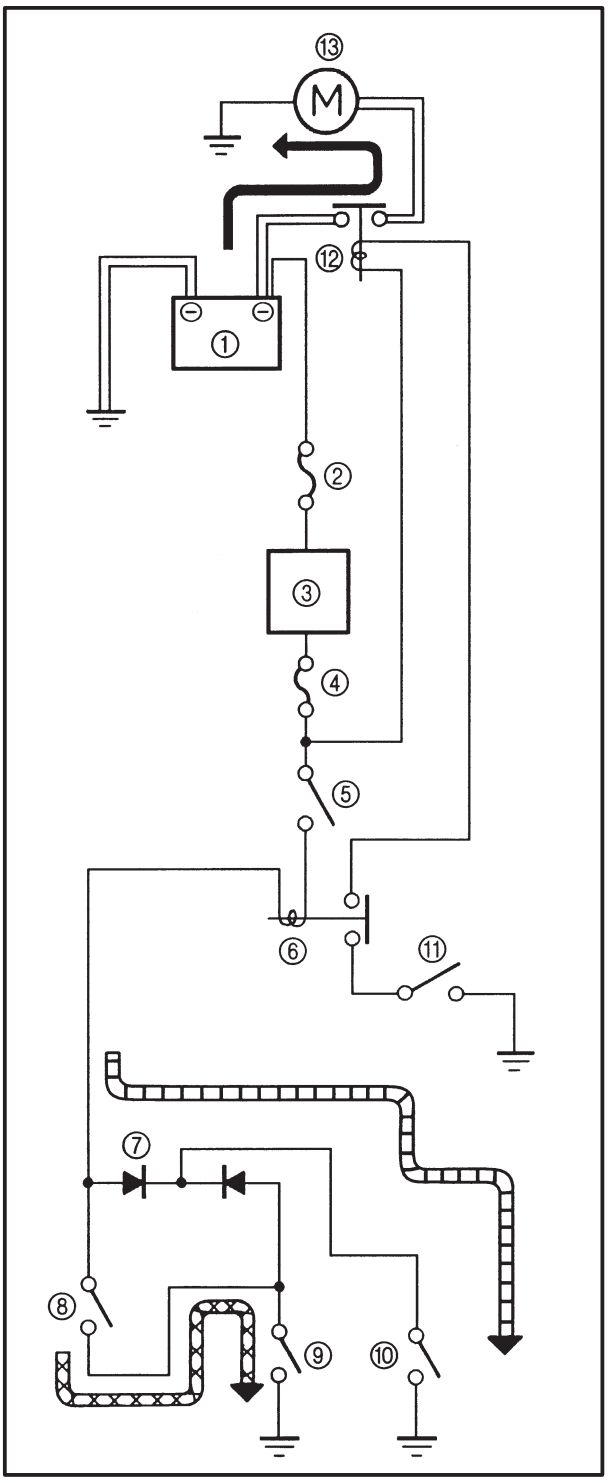

EAS00756

STARTING CIRCUIT CUTOFF SYSTEM OPERATION

If the engine stop switch is set to "⟲" and the main switch is set to "ON" (both switches are closed), the starter motor can only operate if at least one of the following conditions is met:

- The transmission is in neutral (the neutral switch is closed).
- The clutch lever is pulled to the handlebar (the clutch switch is closed) and the sidestand is up (the sidestand switch is closed).

The starting circuit cutoff relay prevents the starter motor from operating when neither of these conditions has been met. In this instance, the starting circuit cutoff relay is open so current cannot reach the starter motor. When at least one of the above conditions has been met the starting circuit cutoff relay is closed and the engine can be started by pressing the start switch.

WHEN THE TRANSMISSION IS IN NEUTRAL

WHEN THE SIDESTAND IS UP AND THE CLUTCH LEVER IS PULLED TO THE HANDLEBAR

① Battery
② Main fuse
③ Main switch
④ Ignition fuse
⑤ Engine stop switch
⑥ Starting circuit cutoff relay
⑦ Diode
⑧ Clutch switch
⑨ Sidestand switch
⑩ Neutral switch
⑪ Start switch
⑫ Starter relay
⑬ Starter motor

EAS00757

TROUBLESHOOTING

The starter motor fails to turn.

Check:
1. main and ignition fuses
2. battery
3. starter motor
4. starting circuit cutoff relay
5. diode
6. starter relay
7. main switch
8. engine stop switch
9. neutral switch
10. sidestand switch
11. clutch switch
12. start switch
13. wiring
    (of the entire starting system)

NOTE:
- Before, troubleshooting, remove the following part(-s):
1) seat
2) fuel tank
3) headlight unit
- Troubleshoot with the following special tool(-s).

Pocket tester
90890-03112

EAS00738

1. Main and ignition fuses

- Check the main and ignition fuses for continuity.
  Refer to "CHECKING THE FUSES" in chapter 3.
- Are the main and ignition fuses OK?

YES → NO → Replace the fuse(-s).

EAS00739

2. Battery

- Check the condition of the battery.
  Refer to "CHECKING AND CHARGING THE BATTERY" in chapter 3.

Open-circuit voltage
12.8 V or more at 20°C

- Is the battery OK?

YES → NO →
- Clean the battery terminals.
- Recharge or replace the battery.

EAS00758

3. Starter motor

- Connect the battery positive terminal ① and starter motor lead ② with a jumper lead ③.

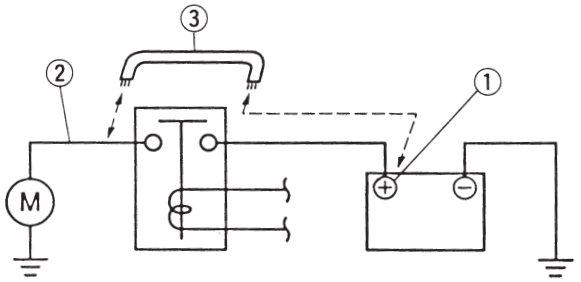

WARNING

- **A wire that is used as a jumper lead must have at least the same capacity of the battery lead, otherwise the jumper lead may burn.**
- **This check is likely to produce sparks, therefore make sure that no flammable gas or fluid is in the vicinity.**

- Does the starter motor turn?

YES → NO → Repair or replace the starter motor.

EAS00759

4. Starting circuit cutoff relay

- Disconnect the relay unit from the coupler.
- Connect the pocket tester (Ω × 1) and battery (12 V) to the relay unit terminals as shown.

Battery positive terminal → red/black ①
Battery negative terminal → black/yellow ②

Tester positive probe → blue/white ③
Tester negative probe → black ④

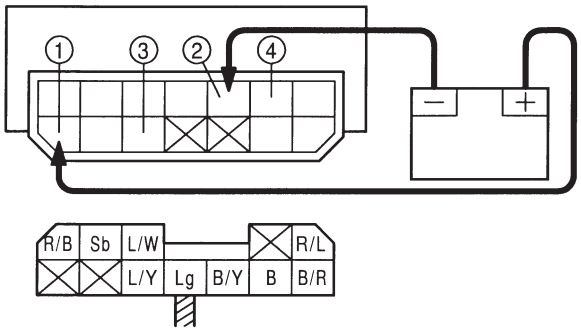

- Does the starting circuit cutoff relay have continuity between black and blue/white?

YES → NO

Replace the relay unit.

EAS00760

5. Diode

- Disconnect the starting circuit cutoff relay from the coupler.
- Connect the pocket tester (Ω × 1) to the starting circuit cutoff relay terminals as shown.
- Measure the starting circuit cutoff relay for continuity as follows.

Tester positive probe → light green ① **Tester negative probe → black/yellow ②**	**Continuity**
Tester positive probe → black/yellow ② **Tester negative probe → light green ①**	**No continuity**

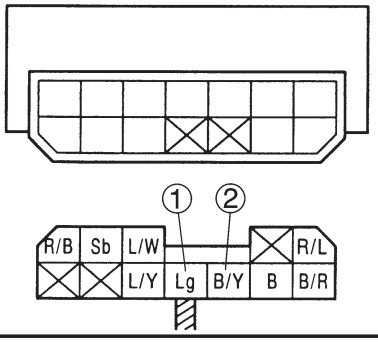

NOTE:

When you switch the "–" and "+" leads of the digital pocket tester the readings in the above chart will be reversed.

- Are the tester readings correct?

YES → NO

Replace the relay unit.

EAS00761

6. Starter relay

- Disconnect the starter relay from the coupler.
- Connect the pocket tester (Ω × 1) and battery (12 V) to the starter relay coupler as shown.

Battery positive terminal → red/white ①
Battery negative terminal → blue/white ②

Tester positive probe → red ③
Tester negative probe → black ④

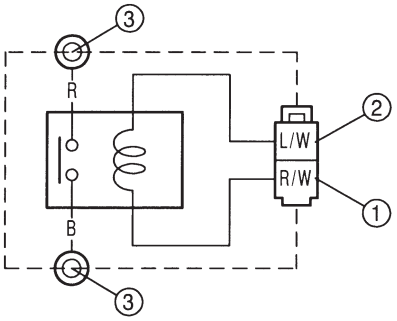

- Does the starter relay have continuity between red and black?

YES → NO → Replace the starter relay.

EAS00749

7. Main switch

- Check the main switch for continuity. Refer to “CHECKING THE SWITCHES”.
- Is the main switch OK?

YES → NO → Replace the main switch.

EAS00750

8. Engine stop switch

- Check the engine stop switch for continuity. Refer to “CHECKING THE SWITCHES”.
- Is the engine stop switch OK?

YES → NO → Replace the right handlebar switch.

EAS00751

9. Neutral switch

- Check the neutral switch for continuity. Refer to “CHECKING THE SWITCHES”.
- Is the neutral switch OK?

YES → NO → Replace the neutral switch.

EAS00752

10. Sidestand switch

- Check the sidestand switch for continuity. Refer to “CHECKING THE SWITCHES”.
- Is the sidestand switch OK?

YES → NO → Replace the sidestand switch.

EAS00763

11. Clutch switch

- Check the clutch switch for continuity. Refer to “CHECKING THE SWITCHES”.
- Is the clutch switch OK?

YES → NO → Replace the clutch switch.

EAS00764

12. Start switch

- Check the start switch for continuity.
  Refer to “CHECKING THE SWITCHES”.
- Is the start switch OK?

YES → NO → Replace the right handlebar switch.

EAS00766

13. Wiring

- Check the entire starting system’s wiring.
  Refer to “CIRCUIT DIAGRAM”.
- Is the starting system’s wiring properly connected and without defects?

NO → Properly connect or repair the starting system’s wiring.

YES → The starting system circuit is OK.

STARTER MOTOR

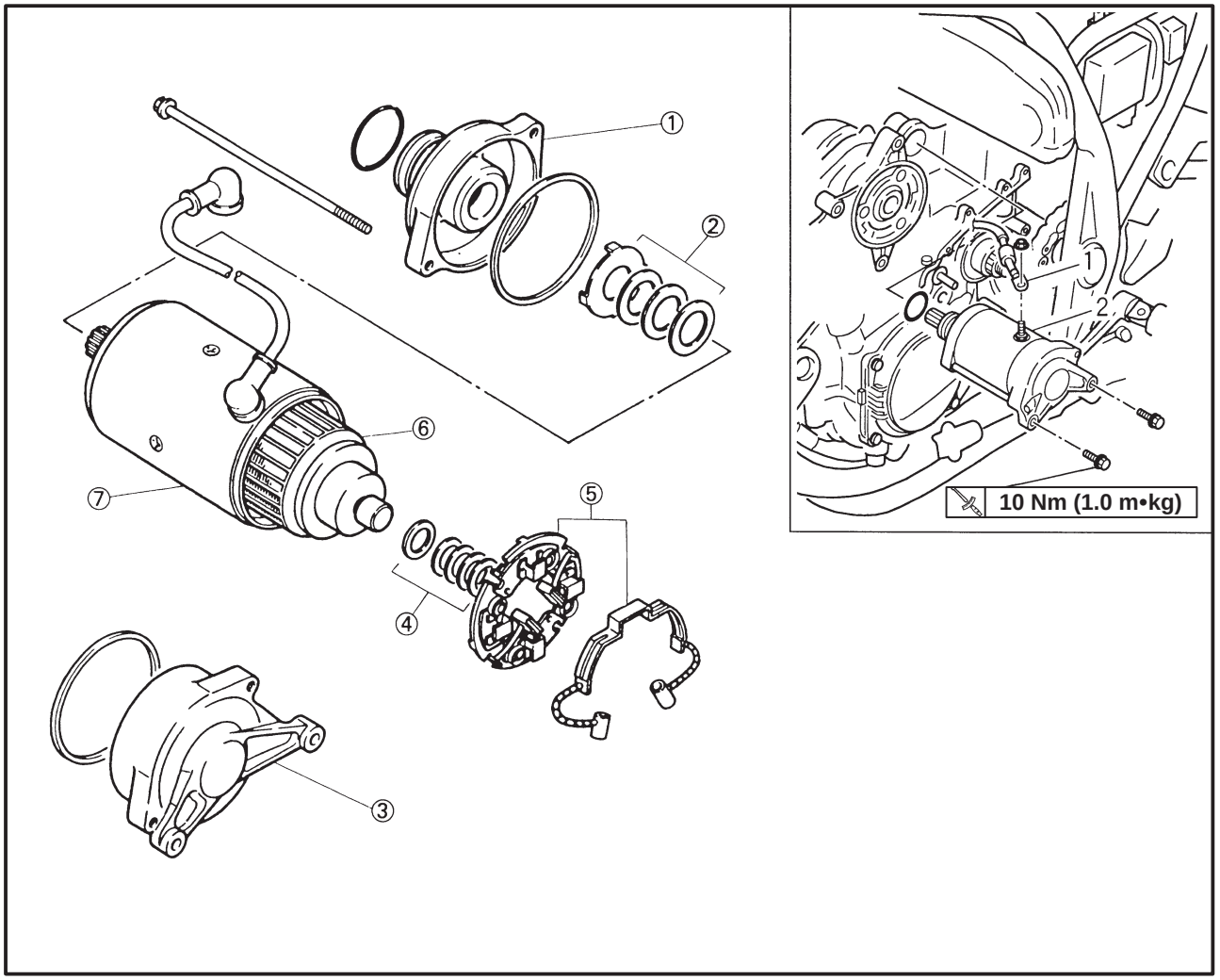

Order	Job/Part	Q'ty	Remarks
	Removing the starter motor		Remove the parts in the order listed.
1	Starter motor lead	1	
2	Starter motor assembly	1	
			For installation, reverse the removal procedure.
	Disassembling the starter motor		Disassembly the pats in the order listed.
①	Starter motor front cover	1	
②	Washer set	1	
③	Starter motor rear cover	1	
④	washer set	1	
⑤	Brush holder/brush	1/1	
⑥	Armature assembly	1	
⑦	Starter motor yoke	1	
			For assembly, reverse the disassembly procedure

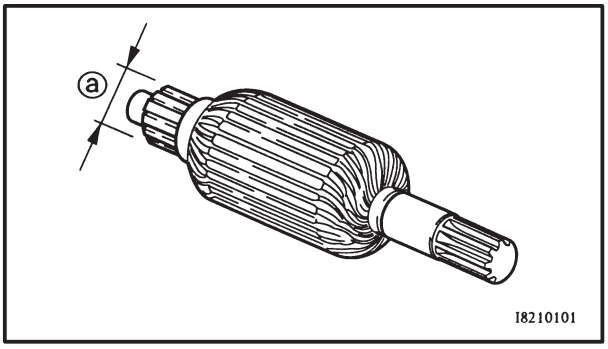

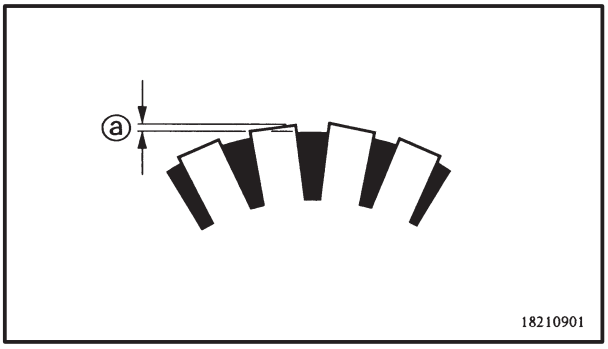

EAS00769

Checking The Starter Motor

1. Check:
   - commutator
     Dirt → Clean with 600 grit sandpaper.
2. Measure:
   - commutator diameter ⓐ
     Out of specification → Replace the starter motor.

Min. commutator diameter
27 mm

3. Measure:
   - mica undercut ⓐ
     Out of specification → Scrape the mica to the proper measurement with a hacksaw blade which has been grounded to fit the commutator.

Mica undercut
0.7 mm

NOTE:

The mica must be undercut to ensure proper operation of the commutator.

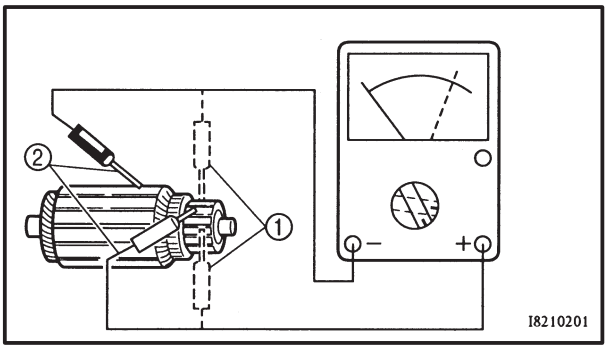

4. Measure:
   - armature assembly resistances (commutator and insulation)
     Out of specification → Replace the starter motor.

a. Measure the armature assembly resistances with the pocket tester.

Pocket tester
90890-03112

Armature assembly
Commutator resistance ①
0.025 ~ 0.035 Ω at 20°C
Insulation resistance ②
Above 1 MΩ at 20°C

b. If any resistance is out of specification, replace the starter motor.

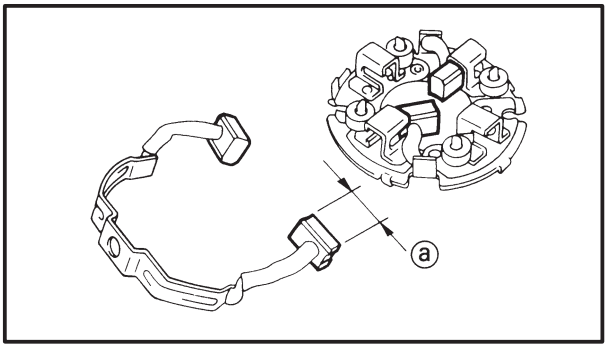

5. Measure:
   - brush length ⓐ
     Out of specification → Replace the brushes as a set.

	Min. brush length **5 mm**

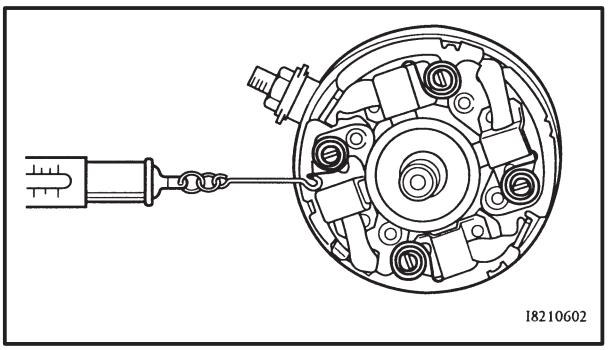

6. Measure:
   - brush spring force
     Out of specification → Replace the brush springs as a set.

	Brush spring force **7.65 ~ 10.01 N (0.780 ~ 1.021 kg)**

7. Check:
   - gear teeth
     Damage/wear → Replace the gear.
8. Check:
   - oil seal
     Damage/wear → Replace the defective part(-s).

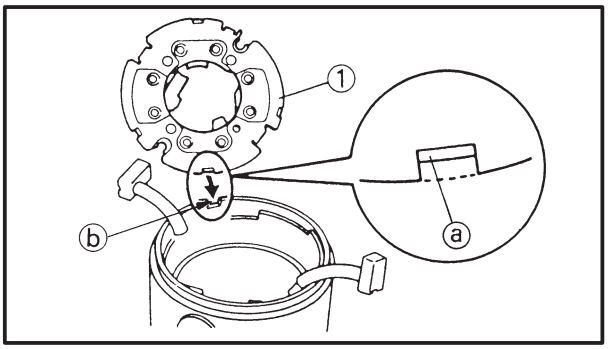

EAS00772

Assembling The Starter Motor

1. Install:
   - brush holder ①

NOTE:

Align the tab ⓐ on the brush holder with the slot ⓑ in the starter motor rear cover.

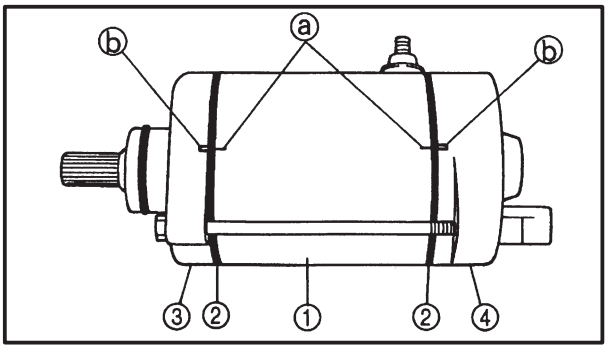

2. Install:
   - starter motor yoke ①
   - O-rings ② New
   - starter motor front cover ③
   - starter motor rear cover ④
   - bolts **5 Nm (0.5 m•kg)**

NOTE:

Align the match marks ⓐ on the starter motor yoke with the match marks ⓑ on the front and rear covers.

EB804000

CHARGING SYSTEM

CIRCUIT DIAGRAM

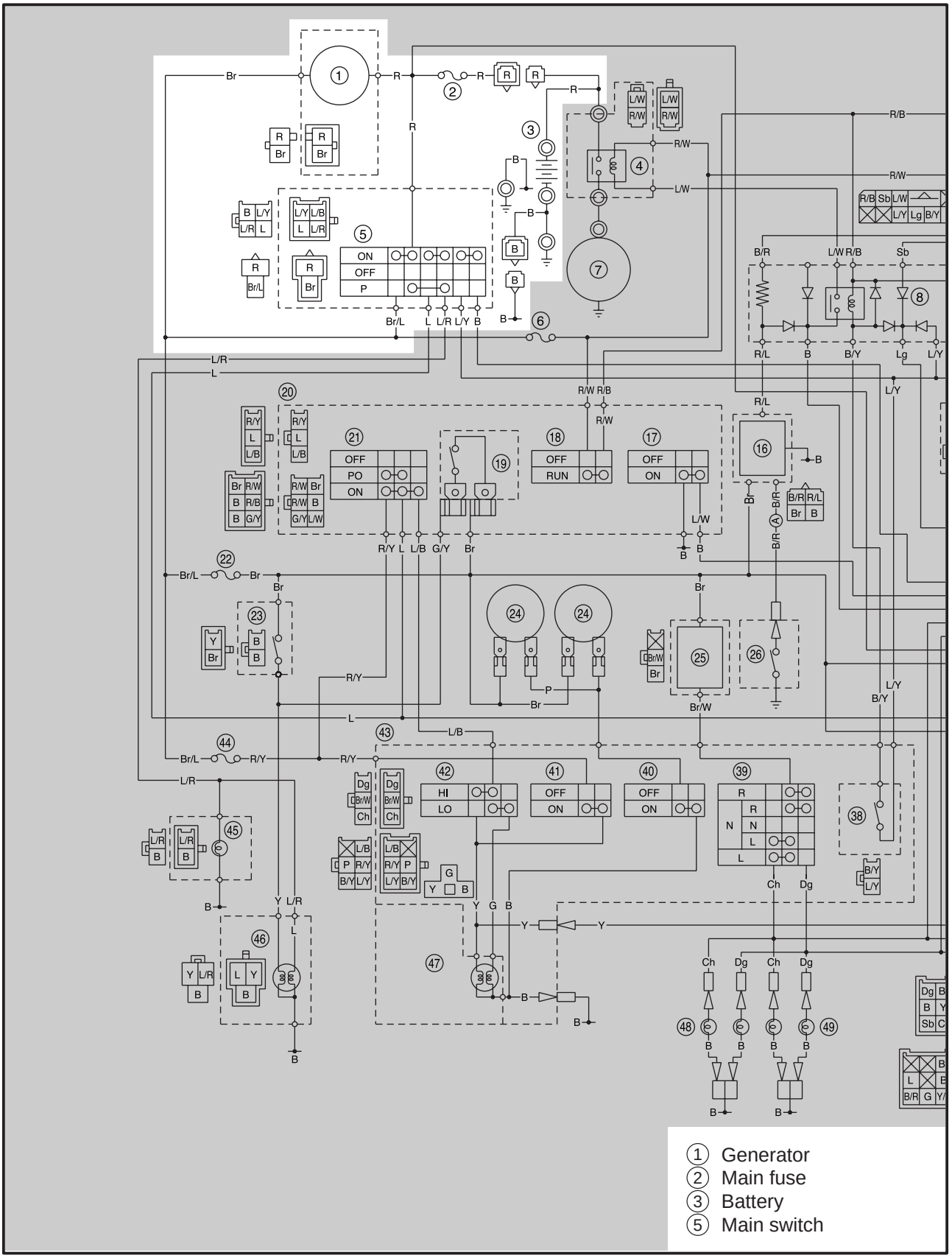
ON
OFF
P
OFF
PO
ON
OFF
RUN
OFF
ON
HI
LO
OFF
ON
OFF
ON
N
R
L
Br
R
L/W
R/W
R/B
Sb
L/Y
Lg
B/Y
B/R
L/R
B
Br/L
L/R
L
R/Y
G/Y
Br/W
Dg
Ch
L/B
P
B/Y
G
Y
B
Y
G
B
Y
L/R
L
Y
B
Y
L
B
Y
L/R
B
L/R
B
Y
Br
B
B
Br/L
Br
Br
R/Y
L
Br
P
Br
Br/W
Br
L
L/B
Br/L
R/Y
R/Y
L/R
B
B
B

EAS00774

TROUBLESHOOTING

The battery is not being charged.

Check:
1. main fuse
2. battery
3. charging voltage
4. startor coil assembly resistance
5. brush check
6. field coil resistance
7. main switch
8. wiring
   (of the entire charging system)

NOTE:
- Before troubleshooting, remove the following part(-s):
1) seat
2) fuel tank
3) headlight unit
- Troubleshoot with the following special tool(-s).

Engine tachometer
90890-03113
Pocket tester
90890-03112

EAS00738

1. Main fuse

- Check the main fuse for continuity.
  Refer to "CHECKING THE FUSES" in chapter 3.
- Is the main fuse OK?

YES

NO

Replace the fuse.

EAS00739

2. Battery

- Check the condition of the battery.
  Refer to "CHECKING AND CHARGING THE BATTERY" in chapter 3.

Open-circuit voltage
12.8 V or more at 20°C

- Is the battery OK?

YES

NO

- Clean the battery terminals.
- Recharge or replace the battery.

EAS00775

3. Charging voltage

- Connect the engine tachometer to the spark plug lead of cylinder #1.
- Connect the pocket tester (DC 20 V) to the battery as shown.

Tester positive probe →
battery positive terminal
Tester negative probe →
battery negative terminal

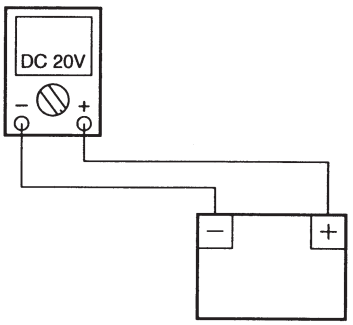

- Start the engine and let it run at approximately 5,000 r/min.
- Measure the charging voltage.

Charging voltage
14 V at 5,000 r/min

NOTE:
Make sure that the battery is fully charged.

- Is the charging voltage within specification?

NO → YES

The charging circuit is OK.

EAS00776

4. Stator coil assembly resistances

- Remove the generator cover.
- Connect the pocket tester (Ω × 1) to the stator coil assembly coupler as shown.

Tester positive probe → white ①
Tester negative probe → black ②

Tester positive probe → white ①
Tester negative probe → black ③

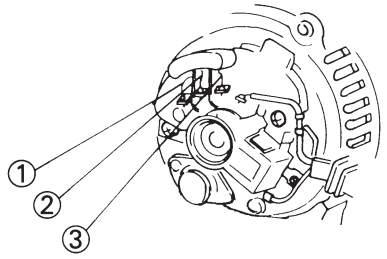

- Measure the stator coil assembly resistances.

Stator coil resistance
0.19 ~ 0.21 Ω at 20°C

- Is the stator coil assembly OK?

YES → NO

Replace the stator coil assembly.

EAS00777

5. Brush check

- Remove the brush holder ① .

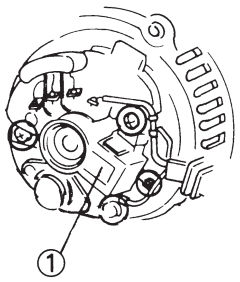

- Check the brush spring.
- Measure the overall length of brushes.

Brush spring force
5.10 ~ 5.69 N (0.52 ~ 0.58 kg)
Brush overall length <wear limit>
13.7 mm <4.7 mm>

- Are the brush spring and brush OK?

YES → NO

Replace the brushes and brush spring as a set.

EAS00778

6. Field coil resistance

- Connect the pocket tester (Ω × 1) to the rotor as shown.

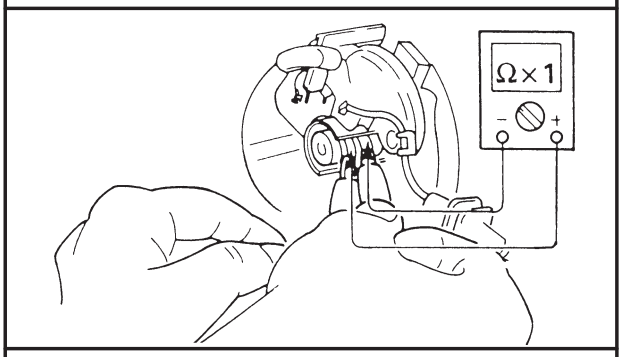

- Measure the field coil resistance.

Field coil resistance
2.8 ~ 3.0 Ω at 20°C

- Is the field coil OK?

YES → NO → Replace the field coil.

EAS00749

7. Main switch

- Check the mian switch for continuity.
  Refer to “CHECKING THE SWITCHES”.
- Is the main switch OK?

YES → NO → Replace the main switch.

EAS00779

8. Wiring

- Check the wiring connections of the entire charging system.
  Refer to “CIRCUIT DIAGRAM”.
- Is the charging system’s wiring properly connected and without defects?

NO → Properly connect or repair the charging system’s wiring.

YES → Replace the rectifier.

A.C. GENERATOR

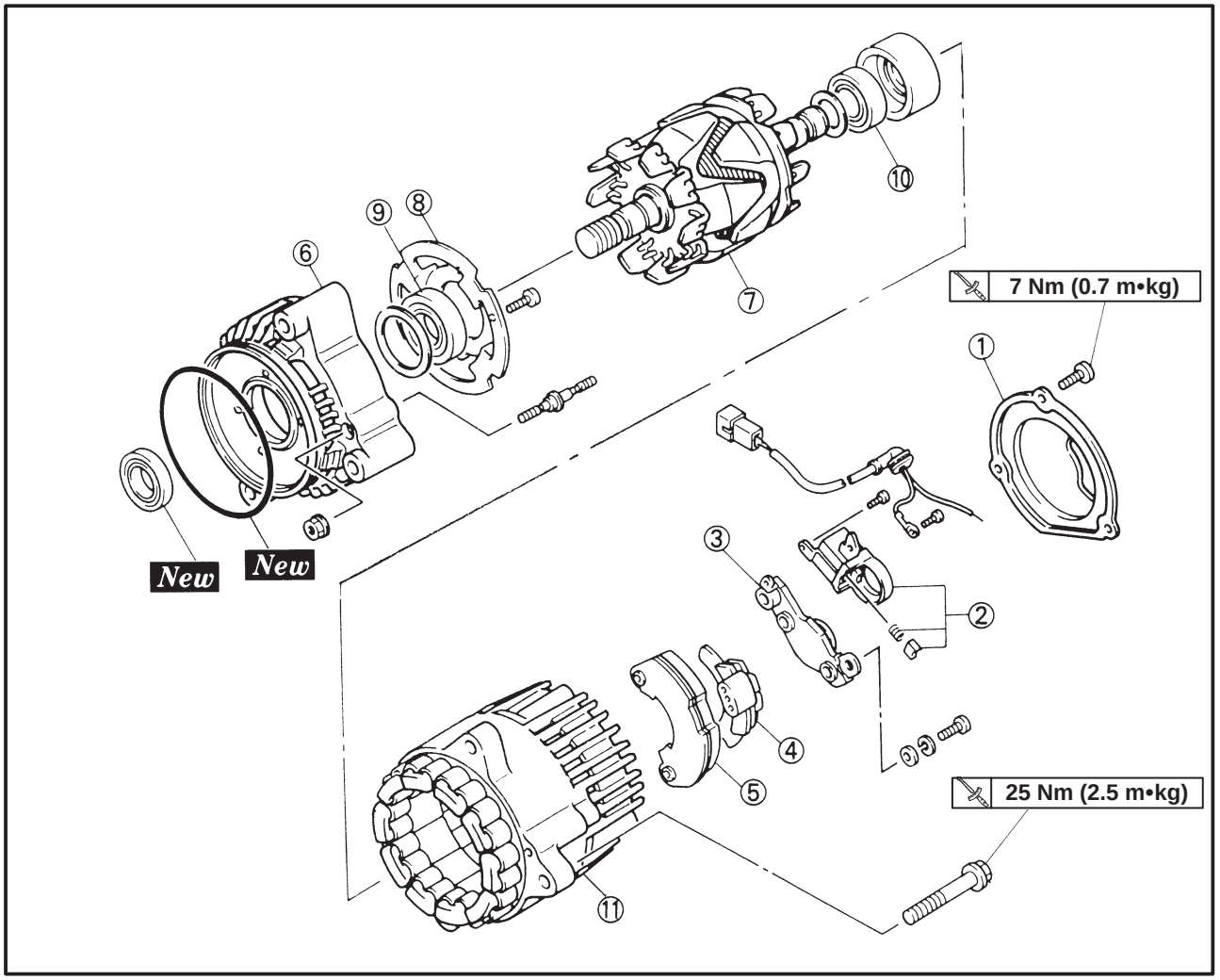

Order	Job/Part	Q'ty	Remarks
	Disassembling the A.C. Generator		Disassembly the parts in the order list.
①	Cover	1	
②	Brush holder	1	
③	Regulator	1	
④	Rectifier cover	1	
⑤	Rectifier	1	
⑥	Rear cover	1	
⑦	Rotor assembly	1	
⑧	Bearing cover	1	
⑨	Bearing	1	
⑩	Bearing	1	
⑪	Stator assembly	1	
			For assembly, reverse the disassembly procedure.

EAS00780

LIGHTING SYSTEM

CIRCUIT DIAGRAM

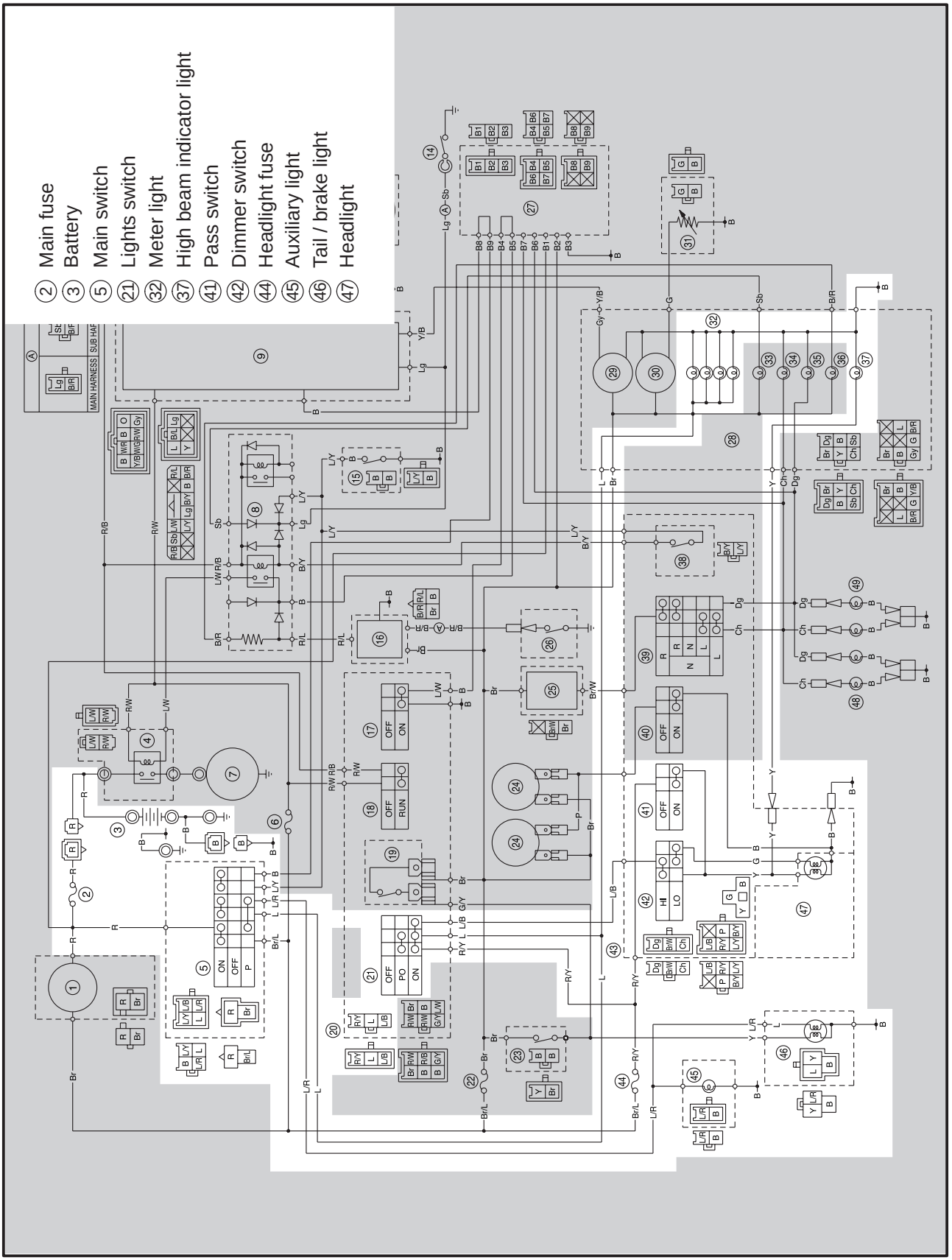

EAS00781

TROUBLESHOOTING

Any of the following fail to light: headlight, high beam indicator light, taillight, auxiliary light (for Europe) or meter light.

Check:
1. main, and headlight fuses
2. battery
3. main switch
4. lights switch (for Europe)
5. dimmer switch
6. pass switch
7. wiring
   (of the entire charging system)

NOTE:

- Before troubleshooting, remove the following part(-s):
1) seat
2) fuel tank
3) headlight unit
- Troubleshoot with the following special tool(-s).

Pocket tester
90890-03112

EAS00738

1. Main, and headlight fuses

- Check the main, and headlight fuses for continuity.
  Refer to “CHECKING THE FUSES” in chapter 3.
- Are the main, and headlight fuses OK?

YES → NO → Replace the fuse(-s).

EAS00739

2. Battery

- Check the condition of the battery.
  Refer to “CHECKING AND CHARGING THE BATTERY” in chapter 3.

Open-circuit voltage
12.8 V or more at 20°C

- Is the battery OK?

YES → NO →
- Clean the battery terminals.
- Recharge or replace the battery.

EAS00749

3. Main switch

- Check the main switch for continuity.
  Refer to “CHECKING THE SWITCHES”.
- Is the main switch OK?

YES → NO → Replace the main switch.

EAS00783

4. Lights switch (for Europe)

- Check the lights switch for continuity.
  Refer to “CHECKING THE SWITCHES”.
- Is the lights switch OK?

YES → NO → The lights switch is faulty. Replace the right handlebar switch.

EAS00784

5. Dimmer switch

- Check the dimmer switch for continuity. Refer to “CHECKING THE SWITCHES”.
- Is the dimmer switch OK?

YES ⇩ NO ⬇

The dimmer switch is faulty. Replace the left handlebar switch.

EAS00786

6. Pass switch

- Check the pass switch for continuity. Refer to “CHECKING THE SWITCHES”.
- Is the pass switch OK?

YES ⇩ NO ⬇

The pass switch is faulty. Replace the left hadlebar switch.

EAS00787

7. Wiring

- Check the entire lighting system’s wiring. Refer to “CIRCUIT DIAGRAM”.
- Is the lighting system’s wiring properly connected and without defects?

YES ⇩ NO ⬇

Check the condition of each of the lighting system’s circuits. Refer to “CHECKING THE LIGHTING SYSTEM”.

Properly connect or repair the lighting system’s wiring.

EAS00788

CHECKING THE LIGHTING SYSTEM

1. The headlight and the high beam indicator light fail to come on.

1. Headlight bulb and socket

- Check the headlight bulb and socket for continuity. Refer to “CHECKING THE BULBS AND BULB SOCKETS”.
- Are the headlight bulb and socket OK?

YES ⇩ NO ⬇

Replace the headlight bulb, socket or both.

2. Voltage

- Connect the pocket tester (DC 20 V) to the headlight and high beam indicator light couplers as shown.

A When the dimmer switch is set to “ ”
B When the dimmer switch is set to “ ”

Headlight coupler (wire harness side)

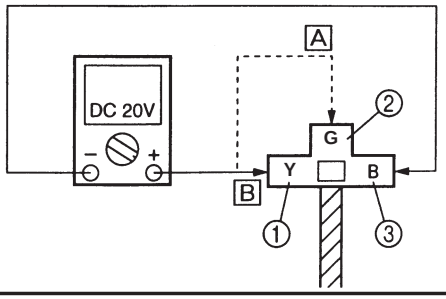

Headlight
Tester positive probe →
yellow ① or green ②
Tester negative probe → black ③
High beam indicator light
Tester positive probe → yellow ④
Tester negative probe → black ⑤

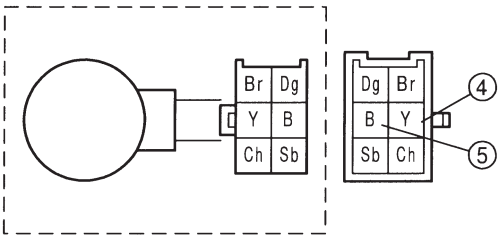

- Set the main switch to "ON".
- Set the light switch to " ☼ ".
- Set the dimmer switch to " ≡D " or " ≡D ".
- Measure the voltage (12 V) of yellow (green) ② on the headlight coupler (headlight side).
- Is the voltage within specification?

YES → This circuit is OK.

NO → The wiring circuit from the main switch to the headlight coupler is faulty and must be repaired.

2. Voltage

- Connect the pocket tester (20 V) to the meter assembly coupler (wire harness side) as shown.

Tester positive probe → blue ①
Tester negative probe → black ②

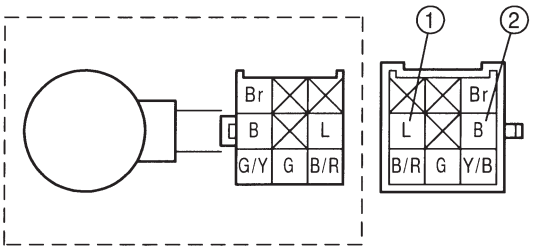

- Set the main switch to "ON".
- Set the light switch to " ≡D ⊂≡ " or " ☼ ".
- Measure the voltage (12 V) of blue ① on the meter assembly coupler (wire harness side).
- Is the voltage within specification?

YES → This circuit is OK.

NO → The wiring circuit from the main switch to the meter assembly coupler is faulty and must be repaired.

EAS00789
2. A meter light fails to come on.

1. Meter light bulb and socket.

- Check the meter light bulb and socket for continuity.
  Refer to "CHECKING THE BULBS AND BULB SOCKETS".
- Are the meter light bulb and socket OK?

YES

NO → Replace the meter light bulb, socket or both.

EAS00790
3. A tail/brake light fails to come on.

1. Tail/brake light bulb and socket

- Check the tail/brake light bulb and socket for continuity.
  Refer to "CHECKING THE BULBS AND BULB SOCKETS".
- Are the tail/brake light bulb and socket OK?

YES

NO → Replace the tail/brake light bulb, socket or both.

2. Voltage

- Connect the pocket tester (DC 20 V) to the tail/brake light coupler (wire harness side) as shown.

Tester positive probe → blue/red ①
Tester negative probe → black ②

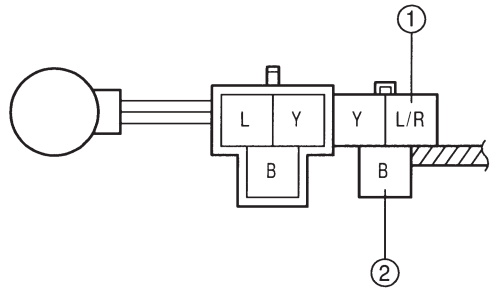

- Set the main switch to "ON".
- Set the light switch to " ≡D ◁≡ " or " ☼ ".
- Measure the voltage (12 V) of blue/red ① on the tail/brake light coupler (wire harness side).
- Is the voltage within specification?

YES → This circuit is OK.

NO → The wiring circuit from the main switch to the tail/brake light coupler is faulty and must be repaired.

2. Voltage

- Connect the pocket tester (DC 20 V) to the auxiliary light couplers (wire harness side) as shown.

Tester positive probe → blue/red ①
Tester negative probe → black ②

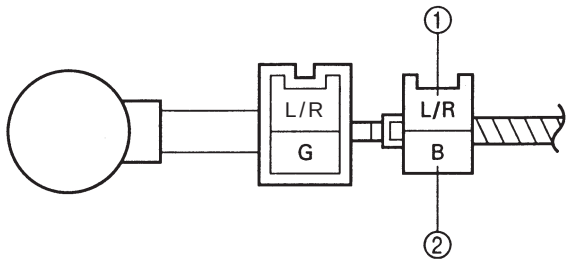

- Set the main switch to "ON".
- Set the light switch to " ≡D ◁≡ " or " ☼ ".
- Measure the voltage (12 V) of blue/red ① on the auxiliary light couplers (wire harness side).
- Is the voltage within specification?

YES → This circuit is OK.

NO → The wiring circuit from the main switch to the auxiliary light connectors is faulty and must be repaired.

EB805413

4. The auxiliary light fails to come on. (for Europe)

1. Auxiliary light bulb and socket

- Check the auxiliary light bulb and socket for continuity.
  Refer to "CHECKING THE BULBS AND BULB SOCKETS".
- Are the auxiliary light bulb and socket OK?

YES

NO → Replace the auxiliary light bulb, socket or both.

EAS00793

SIGNALING SYSTEM

CIRCUIT DIAGRAM

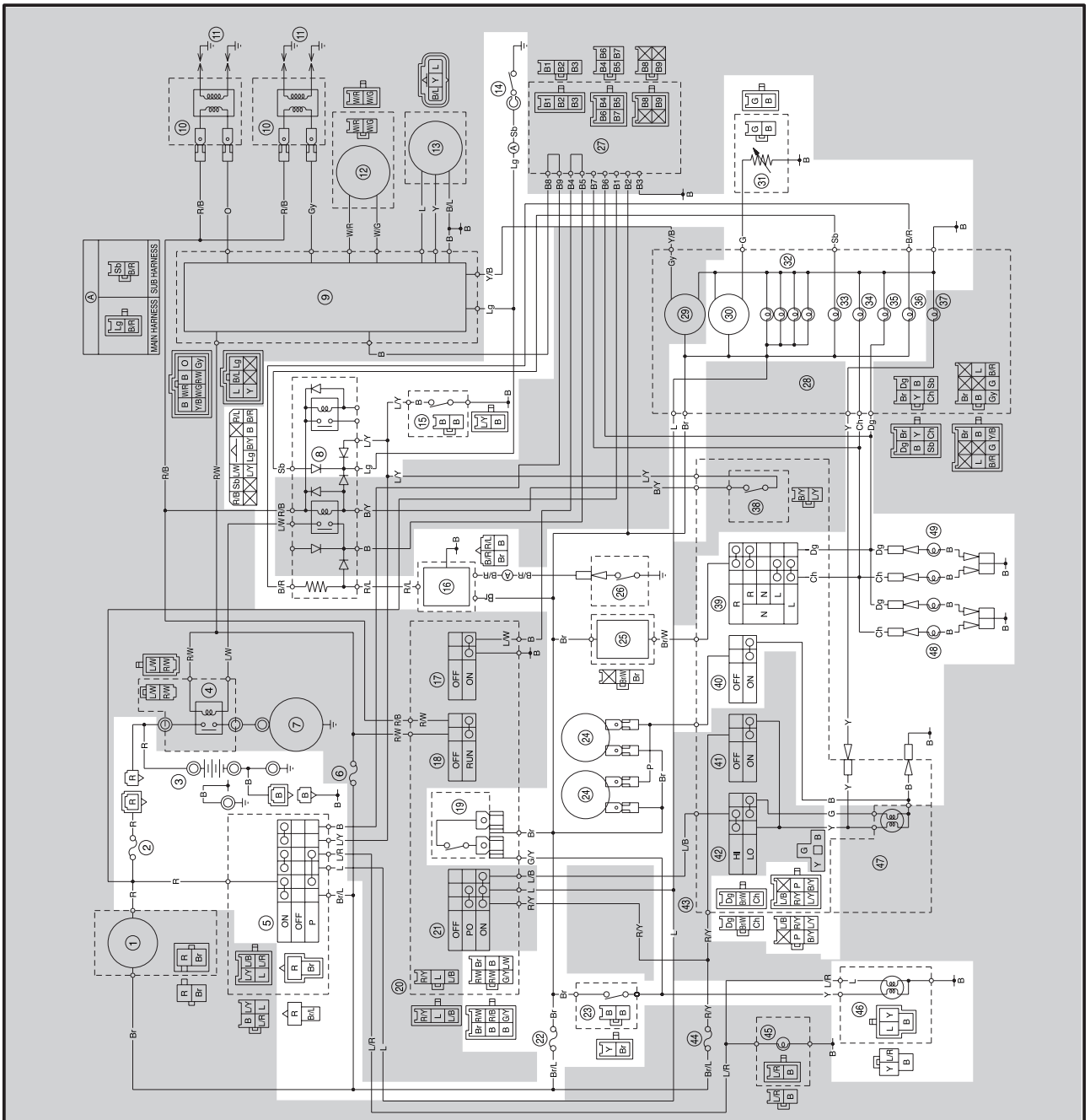

② Main fuse
③ Battery
⑤ Main switch
⑭ Neutral switch
⑯ Oil level relay
⑲ Front brake light switch
㉒ Signaling system fuse
㉓ Rear brake light switch
㉔ Horn
㉕ Flasher relay
㉖ Oil level switch
㉚ Fuel gauge
㉛ Fuel sender
㉝ Neutral indicator light
㉞ Turn signal indicator light (left
㉟ Turn signal indicator light (right)
㊱ Oil level warning light
㊴ Turn signal switch
㊵ Horn switch
㊻ Tail/brake light
㊽ Front turn signal light
㊾ Rear turn signal light

EB806010

TROUBLESHOOTING

- **Any of the following fail to light: turn signal light, brake light or an indicator light.**
- **The horn fails to sound.**

Check:
1. main and signaling system fuses
2. battery
3. main switch
4. wiring
   (of the entire signaling system)

NOTE:

- Before troubleshooting, remove the following part(-s):
1) seats
2) fuel tank
3) headlight unit
- Troubleshoot with the following special tool(-s).

Pocket tester
90890-03112

EAS00738

1. Main and signaling system fuses

- Check the main and signaling system fuses for continuity.
  Refer to "CHECKING AND CHANGING THE FUSES" in chapter 3.
- Are the main and signaling system fuses OK?

YES → NO → Replace the fuse(-s).

EAS00739

2. Battery

- Check the condition of the battery.
  Refer to "CHECKING THE BATTERY" in chapter 3.

Open-circuit voltage
12.8 V or more at 20°C

- Is the battery OK?

YES → NO →
- Clean the battery terminals.
- Recharge or replace the battery.

EAS00749

3. Main switch

- Check the main switch for continuity.
  Refer to "CHECKING THE SWITCHES".
- Is the main switch OK?

YES → NO → Replace the main switch.

EAS00795

4. Wiring

- Check the entire signaling system's wiring.
  Refer to "CIRCUIT DIAGRAM".
- Is the signaling system's wiring properly connected and without defects?

YES → Check the condition of each of the signaling system's circuits. Refer to "CHECKING THE SIGNALING SYSTEM".

NO → Properly connect or repair the signaling system's wiring.

EAS00796

CHECKING THE SIGNALING SYSTEM

1. The horn fails to sound.

1. Horn switch

- Check the horn switch for continuity. Refer to “CHECKING THE SWITCHES”.
- Is the horn switch OK?

YES ⇩ NO ⬇

Replace the left handlebar switch.

2. Voltage

- Connect the pocket tester (DC 20 V) to the horn connector at the horn terminal as shown.

Tester positive probe → brown ①
Tester negative probe → ground

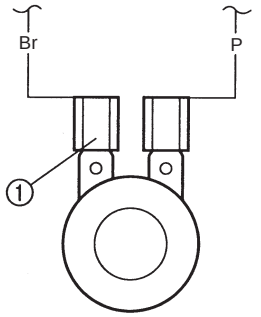

- Set the main switch to “ON”.
- Measure the voltage (12 V) of brown at the horn terminal.
- Is the voltage within specification?

YES ⇩ NO ⬇

The wiring circuit from the main switch to the horn connector is faulty and must be repaired.

3. Horn

- Disconnect the black connector at the horn terminal.
- Connect a jumper lead ① to the horn terminal and ground the jumper lead.
- Set the main switch to “ON”.
- Does the horn sound?

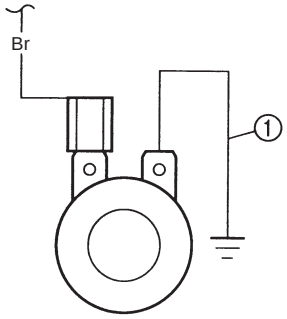

NO ⬇ YES ⇩

The horn is OK.

4. Voltage

- Connect the pocket tester (DC 20 V) to the horn connector at the black terminal as shown.

Tester positive probe → black ①
Tester negative probe → ground

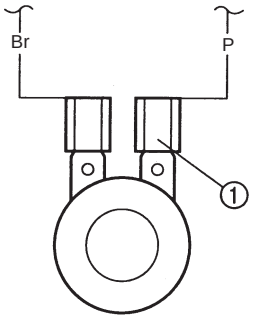

- Set the main switch to “ON”.
- Measure the voltage (12 V) of black ① at the horn terminal.
- Is the voltage within specification?

YES ⇩ NO ⬇

Repair or replace the horn.

Replace the horn.

EAS00797

2. A tail/brake light fails to come on.

1. Tail/brake light bulb and socket

- Check the tail/brake light bulb and socket for continuity.
  Refer to "CHECKING THE BULBS AND BULB SOCKETS".
- Are the tail/brake light bulb and socket OK?

YES → NO → Replace the tail/brake light bulb, socket or both.

2. Brake light switches

- Check the brake light switches for continuity.
  Refer to "CHECKING THE SWITCHES".
- Is the brake light switch OK?

YES → NO → Replace the brake light switch.

3. Voltage

- Connect the pocket tester (DC 20 V) to the tail/brake light coupler (wire harness side) as shown.

Tester positive probe → yellow ①
Tester negative probe → black ②

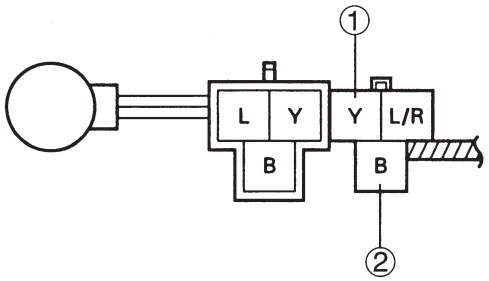

- Set the main switch to "ON".
- Pull in the brake lever or push down on the brake pedal.
- Measure the voltage (12 V) of yellow at the tail/brake light coupler (wire harness side).
- Is the voltage within specification?

YES → This circuit is OK.

NO → The wiring circuit from the main switch to the tail/brake light coupler is faulty and must be repaired.

EAS00799

3. A turn signal light, turn signal indicator light or both fail to blink.

1. Turn signal light bulb and socket

- Check the turn signal light bulb and socket for continuity.
  Refer to "CHECKING THE BULBS AND BULB SOCKETS".
- Are the turn signal light bulb and socket OK?

YES → NO → Replace the turn signal light bulb, socket or both.

2. Turn signal switch

- Check the turn signal for continuity. Refer to “CHECKING THE SWITCHES”.
- Is the turn signal switch OK?

YES

NO

Replace the left handlebar switch.

3. Voltage

- Connect the pocket tester (DC 20 V) to the flasher relay coupler (wire harness side) as shown.

Tester positive probe → brown ①
Tester negative probe → ground

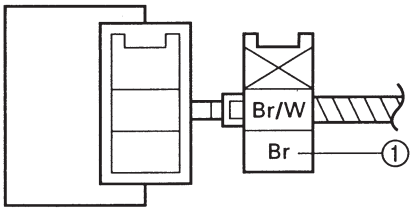

- Set the main switch to “ON”.
- Measure the voltage (12 V) of brown ① at the flasher relay coupler (wire harness side).
- Is the voltage within specification?

YES

NO

The wiring circuit from the main switch to the flasher relay coupler (flasher relay side) is faulty and must be repaired.

4. Voltage

- Connect the tester (DC 20 V) to the flasher relay coupler (wire harness side) as shown.

Tester positive probe → brown/white ①
Tester negative probe → ground

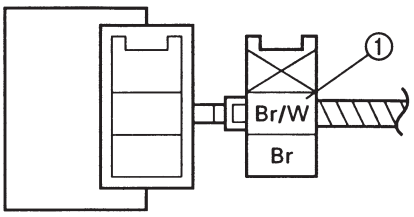

- Set the main switch to “ON”.
- Set the turn signal switch to “ ⇦ ” or “ ⇨ ”.
- Measure the voltage (12 V) or brown/white at the flasher relay coupler (wire harness side).
- Is the voltage within specification?

YES

NO

The flasher relay is faulty and must be replaced.

5. Voltage

- Connect the pocket tester (DC 20 V) to the turn signal light connectors or the meter assembly coupler (wire harness side) as shown.

A Turn signal light
B Turn signal indicator light

Left turn signal light
Tester positive probe → chocolate ①
Tester negative probe → ground
Right turn signal light
Tester positive probe → dark green
Tester negative probe → ground ②

A

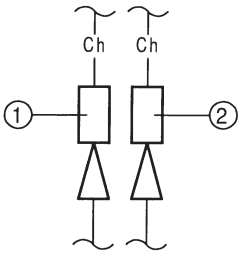

B

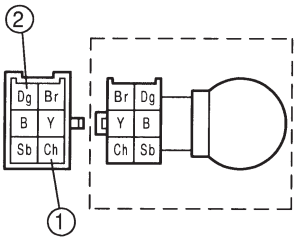

- Set the main switch to “ON”.
- Set the turn signal switch to “ ⇦ ” or “ ⇨ ”.
- Measure the voltage (12 V) of chocolate ① or dark green ② at the turn signal light connector (wire harness side).
- Is the voltage within specification?

YES → This circuit is OK.

NO → The wiring circuit from the turn signal switch to the turn signal light connector is faulty and must repaired.

EAS00800

4. The neutral indicator light fails to come on.

1. Neutral indicator light bulb and socket

- Check the neutral indicator light bulb and socket for continuity.
  Refer to “CHECKING THE BULBS AND BULB SOCKETS”.
- Are the neutral indicator light bulb and socket OK?

YES

NO → Replace the neutral indicator light bulb, socket or both.

2. Neutral switch

- Check the neutral switch for continuity.
  Refer to “CHECKING THE SWITCHES”.
- Is the neutral switch OK?

YES

NO → Replace the neutral switch.

EAS00760

3. Diode

- Disconnect the starting circuit cutoff relay from the coupler.
- Connect the pocket tester (Ω × 1) to the starting circuit cutoff relay terminals as shown.
- Measure the starting circuit cutoff relay for continuity as follows.

Tester positive probe → light green ① **Tester negative probe → sky blue ②**	**Continuity**
Tester positive probe → sky blue ② **Tester negative probe → light green ①**	**No continuity**

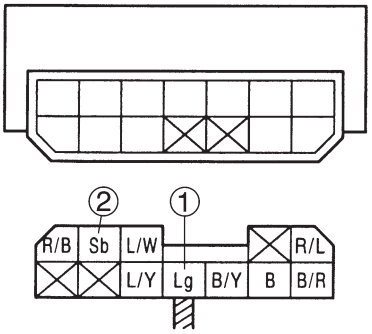

NOTE:

When you switch the “–” and “+” leads of the digital pocket tester the readings in the above chart will be reversed.

- Are the tester readings correct?

YES

NO → Replace the relay unit.

4. Voltage

- Connect the pocket tester (DC 20 V) to the meter assembly coupler (wire harness side) as shown.

Tester positive probe → brown ①
Tester negative probe → sky blue ②

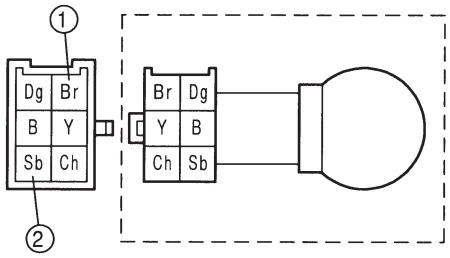

- Set the main switch to "ON".
- Measure the voltage (12 V) of brown ① and sky blue ② at the meter assembly coupler.
- Is the voltage within specification?

YES → This circuit is OK.

NO → The wiring circuit from the main switch to the meter light bulb coupler is faulty and must be repaired.

EAS00802
5. The oil level warning light fails to come on.

1. Oil level warning light bulb and socket

- Check the oil level warnig light bulb and socket for continuity.
  Refer to "CHECKING THE BULBS AND BULB SOCKETS"
- Are the oil level warnig light bulb and socket OK?

YES

NO → Replace the oil level warning light bulb, socket or both.

2. Oil level switch

- Drain the engine oil and remove the oil level switch from the oil pan.
- Check the oil level switch for continuity.
  Refer to "CHECKING THE SWITCHES".
- Is the oil level switch OK?

YES

NO → Replace the oil level switch.

3. Oil level relay

- Disconnect the oil level relay from the coupler.
- Connect the pocket tester (Ω × 1) and battery (12 V) to the oil level relay terminals as shown.

Battery positive terminal → brown ①
Battery negative terminal → black/red ②

Tester positive probe → red/blue ③
Tester negative probe → black ④

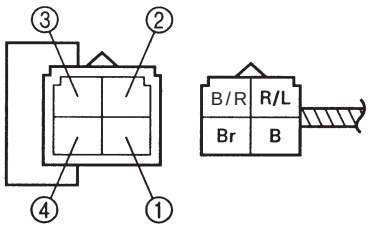

- Does the oil level relay have continuity between red/blue and black?

YES

NO → Replace the oil level relay.

4. Starting circuit cutoff relay

- Disconnect the relay unit from the coupler.
- Connect the pocket tester (Ω × 1) to the relay unit terminals as shown.

Tester positive probe → red/blue ①
Tester negative probe → brack/red ②

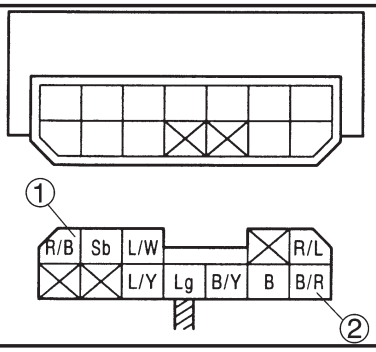

- Measure the relay unit resistance.

Relay unit resistance
8.2 Ω at 20°C

- Is the relay unit OK?

YES → NO

Replace the starting circuit cutoff relay.

5. Voltage

- Connect the pocket tester (DC 20 V) to the meter assembly coupler (wire harness side) as shown.

Tester positive probe → brown ①
Tester negative probe → black/red ②

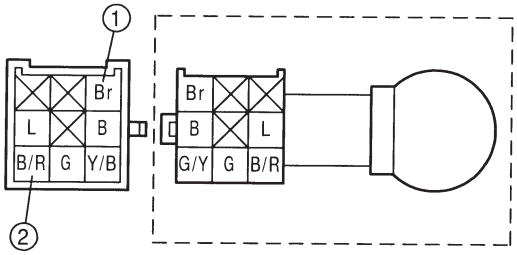

- Set the main switch to "ON".
- Measure the voltage (12 V) of brown ① and black/red at the meter assembly coupler.
- Is the voltage within specification?

YES → This circuit is OK.

NO → The wiring circuit from the main switch to the meter assembly coupler is faulty and must be repaired.

EAS00804
6. The fuel level gauge fails to operate.

1. Fuel sender

- Disconnect the fuel sender coupler from the wire harness.
- Drain the fuel from the fuel tank and remove the fuel sender from the fuel tank.
- Connect the pocket tester to the fuel sender coupler as shown.

Tester positive probe → green ①
Tester negative probe → black ②

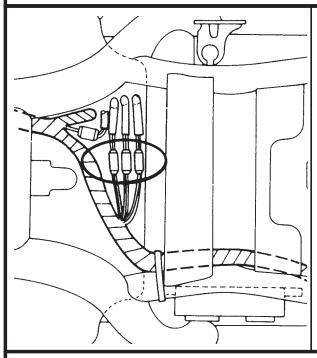

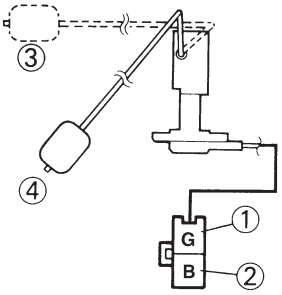

- Measure the fuel sender resistance.

Fuel sender resistance (up position)
4 ~ 10 Ω at 20°C
Fuel sender resistance (down position)
90 ~ 100 Ω at 20°C

- Is the fuel sender OK?

YES → NO

Replace the fuel sender.

2. Voltage

Connect the pocket tester (DC 20 V) to the meter assembly coupler (wire harness side) as shown.

Tester positive probe → brown ①
Tester negative probe → black ②

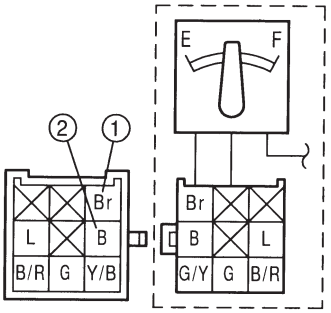

- Set the main switch to "ON".
- Measure the voltage (12 V).
- Is the voltage within specification?

YES

NO

The wiring circuit from the main switch to the meter assembly coupler is faulty and must be repaired.

3. Fuel level gauge

- Set the main switch to "ON".
- Move the float up ① or down ②.

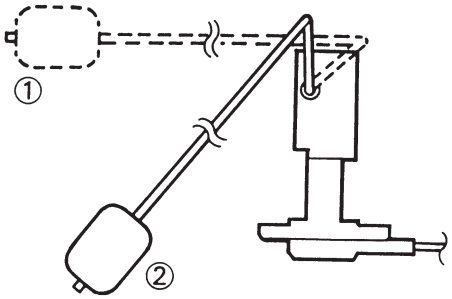

- Check that the fuel level gauge needle move to "F" to "E".

NOTE:

Before reading the fuel level gauge, leave the float in one position (either up or down) for at least three minutes.

- Does the fuel level gauge needle move appropriately?

YES

This circuit is OK.

NO

Replace the fuel level gauge.

EAS00834

SELF-DIAGNOSIS

The XJR1300 (L) features a self-diagnosing system for the following circuit(-s):
- throttle position sensor
- ignition circuit

If any of these circuits are defective, their respective condition codes will be displayed on the tachometer when the main switch is set to “ON” (irrespective of whether the engine is running or not).
The engine is not operated condition code at 2,000 r/min.

Circuit	Defect(-s)	System response	Condition code
Throttle position sensor	• Disconnected • Short-circuit • Locked	• The ignitor unit stays set to the wide-open throttle ignition timing. The motorcycle can be ridden. • The tachometer displays the condition code.	3,000 r/min
Ignition circuit	• Incorrect input signal for side stand switch and neutral switch.	• No ignition • The tachometer displays the condition code.	2,000 r/min

Tachometer display sequence

1) Throttle position sensor

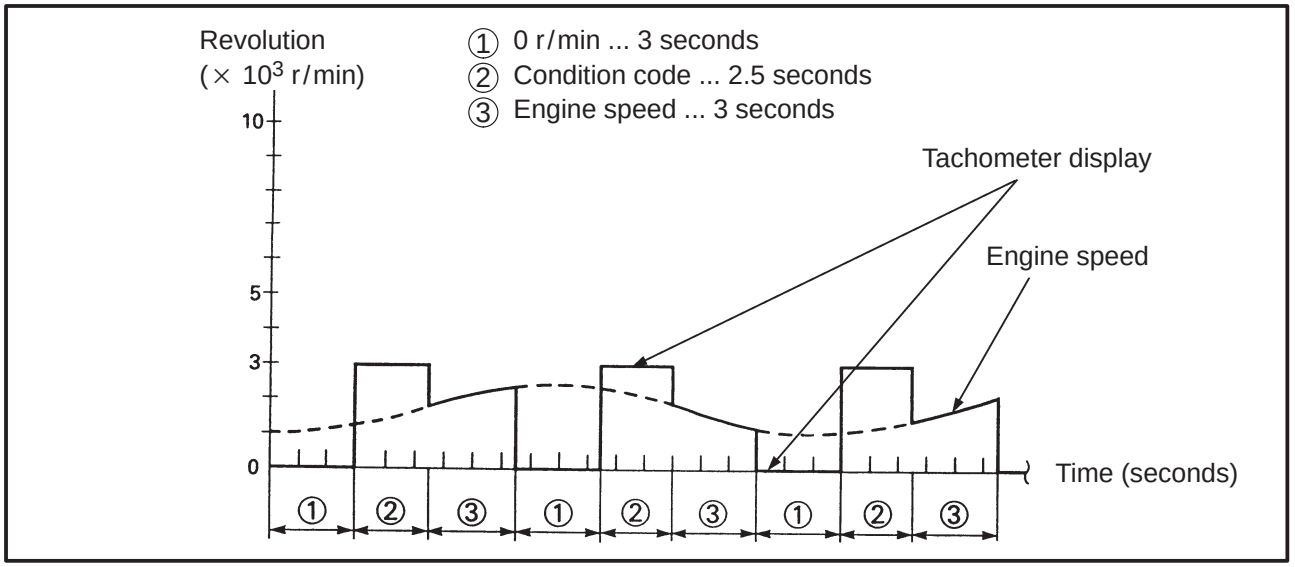

If the engine is stopped, the engine speed ③ is 0 r/min.

2) Ignition circuit

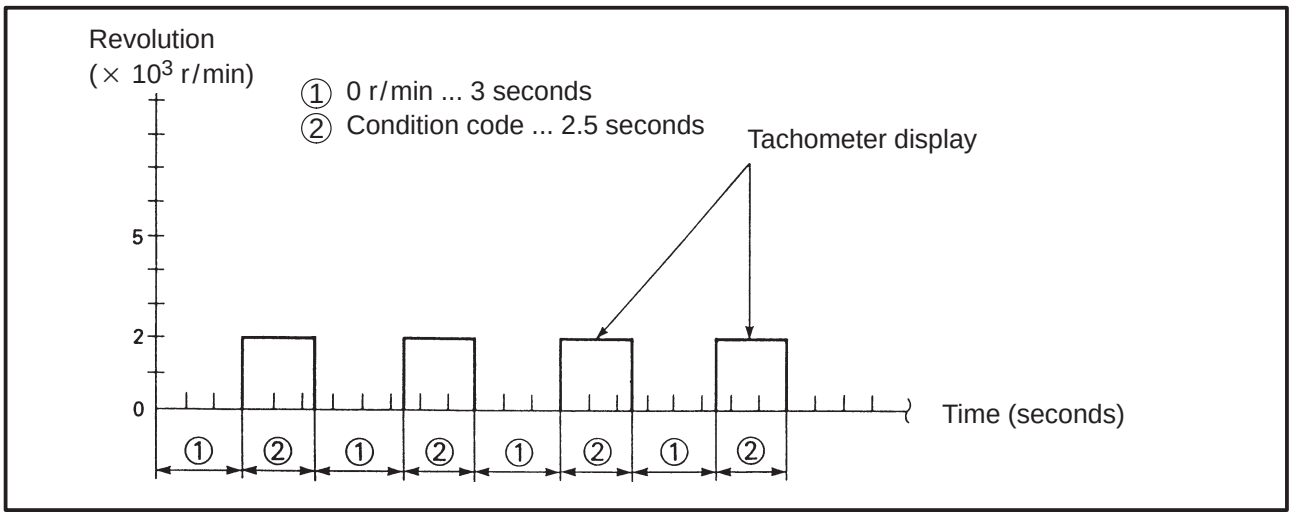

EAS00835

TROUBLESHOOTING

The tachometer starts to display the self-diagnosis sequence.

Check:
1. throttle position sensor
2. ignition circuit

NOTE:

- Before troubleshooting, remove the following part(-s):
1) rider seat
2) fuel tank
3) air filter case
- Troubleshoot with the following special tool(-s).

Pocket tester
90890-03112

EAS00836

1. Throttle position sensor

CIRCUIT DIAGRAM

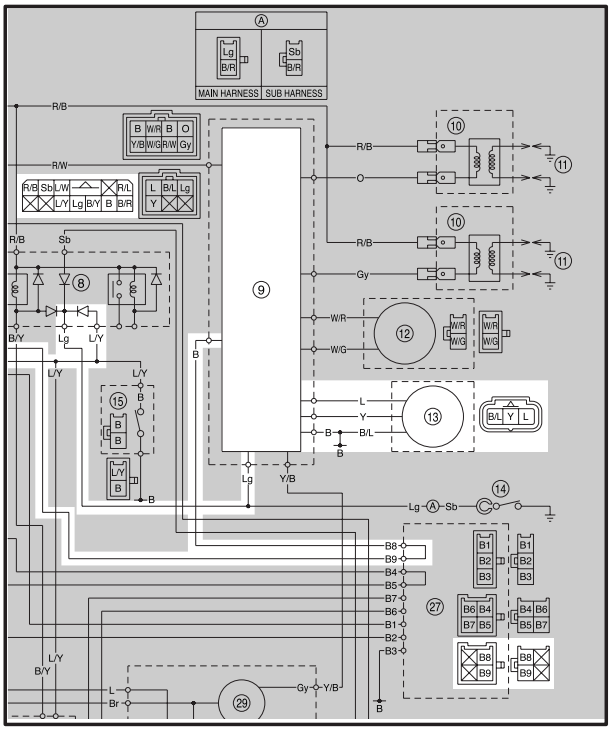

⑬ Throttle position sensor
⑨ Ignitor unit

1. Wire harness

- Check the wire harness for continuity.
  Refer to “CIRCUIT DIAGRAM”.
- Is the wire harness OK?

YES → NO → Repair or replace the wire harness.

EB812401

2. Throttle position sensor

- Check the throttle position sensor for continuity.
  Refer to “CHECKING AND ADJUSTING THE THROTTLE POSITION SENSOR” in chapter 6.
- Is the throttle position sensor OK?

YES → Replace the ignitor unit.

NO → Replace the throttle position sensor.

2. Ignition circuit

CIRCUIT DIAGRAM

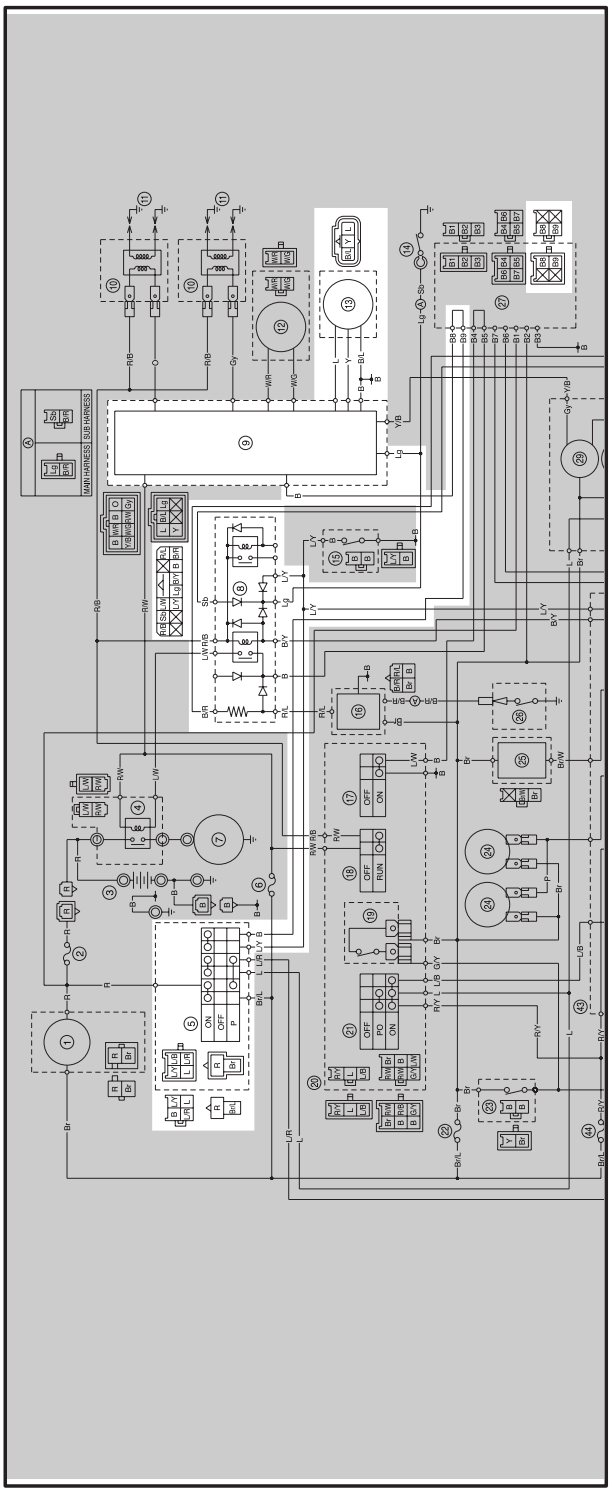

⑤ Main switch
⑧ Starting circuit cutoff relay
⑨ Ignitor unit

EAS00749

3. Main switch

- Check the main switch for continuity. Refer to “CHECKING THE SWITCHES”.
- Is the main switch OK?

YES ⇩ NO ⇩

Replace the main switch.

EB812400

4. Wire harness

- Check the ire harness for continuity. Refer to “CIRCUIT DIAGRAM”.
- Is the wire harness OK?

YES ⇩ NO ⇩

Repair or replace the wire harness.

EAS00760

5. Starting circuit cutoff relay

- Disconnect the starting circuit cutoff relay from the coupler.
- Connect the pocket tester (Ω × 1) to the starting circuit cutoff relay terminals as shown.
- Measure the starting circuit cutoff relay for continuity as follows.

Tester positive probe → light green ① **Tester negative probe → blue/yellow ②**	**Continuity**
Tester positive probe → blue/yellow ② **Tester negative probe → light green ①**	**No continuity**

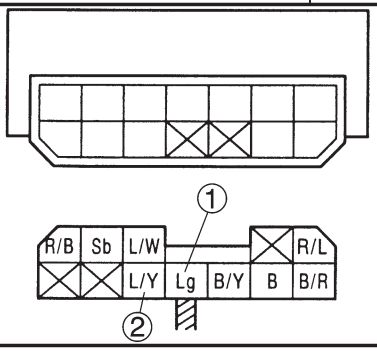

NOTE:
When you switch the "–" and "+" leads of the digital pocket tester the readings in the above chart will be reversed.

- Are the tester readings correct?

YES → Replace the ignitor unit.

NO → Replace the relay unit.

?

TRBL
SHTG

8

CHAPTER 8. TROUBLESHOOTING

STARTING PROBLEMS 8-1
ENGINE 8-1
FUEL SYSTEM 8-1
ELECTRICAL SYSTEMS 8-1

INCORRECT ENGINE IDLING SPEED 8-2
ENGINE 8-2
FUEL SYSTEM 8-2
ELECTRICAL SYSTEMS 8-2

POOR MEDIUM-AND-HIGH-SPEED PERFORMANCE 8-2
ENGINE 8-2
FUEL SYSTEM 8-2

FAULTY GEAR SHIFTING 8-2
SHIFTING IS DIFFICULT 8-2
SHIFT PEDAL DOES NOT MOVE 8-2
JUMPS OUT OF GEAR 8-2

FAULTY CLUTCH 8-3
CLUTCH SLIPS 8-3
CLUTCH DRAGS 8-3

OVERHEATING 8-3
ENGINE 8-3
FUEL SYSTEM 8-3
CHASSIS 8-3
ELECTRICAL SYSTEMS 8-3

POOR BRAKING PERFORMANCE 8-4

FAULTY FRONT FORK LEGS 8-4
LEAKING OIL 8-4
MALFUNCTION 8-4

UNSTABLE HANDLING 8-4

FAULTY LIGHTING AND SIGNALING SYSTEM 8-5
HEADLIGHT DOES NOT LIGHT 8-5
HEADLIGHT BULB BURNT OUT 8-5
TAIL/BRAKE LIGHT DOES NOT LIGHT 8-5
TAIL/BRAKE LIGHT BULB BURNT OUT 8-5
TURN SIGNAL DOES NOT LIGHT 8-5
TURN SIGNAL BUNKS SLOWLY 8-5
TURN SIGNAL REMAINS LIT 8-5
TURN SIGNAL BLINKS QUICKLY 8-5
HORN DOES NOT SOUND 8-5

EAS00844

TROUBLESHOOTING

NOTE:

The following guide for troubleshooting does not cover all the possible causes of trouble. It should be helpful, however, as a guide to basic troubleshooting. Refer to the relative procedure in this manual for checks, adjustments, and replacement of parts.

STARTING PROBLEMS

ENGINE

Cylinders and cylinder head(-s)
- Loose spark plug
- Loose cylinder head
- Damaged cylinder head gasket
- Worn or damaged cylinder
- Incorrect valve clearance
- Incorrectly sealed valve
- Incorrect valve-to-valve-seat contact
- Incorrect valve timing
- Faulty valve spring
- Seized valve

Pistons and piston rings
- Incorrectly installed piston ring
- Damaged, worn or fatigued piston ring
- Seized piston ring
- Seized or damaged piston

Air filter
- Incorrectly installed air filter
- Clogged air filter element

Crankcase and crankshaft
- Incorrectly assembled crankcase
- Seized crankshaft

FUEL SYSTEM

Fuel tank
- Empty fuel tank
- Clogged fuel filter
- Clogged fuel tank breather hose
- Deteriorated or contaminated fuel

Fuel cock
- Clogged or damaged fuel hose/vacuum hose

Carburetors
- Deteriorated or contaminated fuel
- Clogged pilot jet
- Clogged pilot air passage
- Sucked-in air
- Damaged float
- Worn needle valve
- Incorrectly installed needle valve seat
- Incorrect fuel level
- Incorrectly installed pilot jet
- Clogged starter jet
- Faulty starter plunger
- Incorrectly adjusted starter cable

ELECTRICAL SYSTEMS

Battery
- Faulty battery
- Discharged battery

Fuses
- Blown, damaged or incorrect fuse
- Incorrectly installed fuse

Spark plugs
- Incorrect spark plug gap
- Incorrect spark plug heat range
- Fouled spark plug
- Worn or damaged electrode
- Worn or damaged insulator
- Faulty spark plug cap

Ignition coils
- Damaged ignition coil
- Broken or shorted primary or secondary coils
- Faulty spark plug lead

Ignition system
- Faulty ignitor unit
- Faulty pickup coil

Switches and wiring
- Faulty main switch
- Faulty engine stop switch
- Broken or shorted wiring
- Faulty neutral switch
- Faulty start switch
- Faulty sidestand switch
- Faulty clutch switch
- Incorrectly grounded circuit
- Loose connections

Starting system
- Faulty starter motor
- Faulty starter relay
- Faulty starting circuit cutoff relay
- Faulty starter clutch

EAS00846

INCORRECT ENGINE IDLING SPEED

ENGINE

Cylinders and cylinder head

- Incorrect valve clearance
- Damaged valve train components

Air filter

- Clogged air filter element

FUEL SYSTEM

Carburetors

- Faulty starter plunger
- Loose or clogged pilot jet
- Loose or clogged pilot air jet
- Damaged or loose carburetor joint
- Incorrectly synchronized carburetors
- Incorrectly adjusted engine idling speed (throttle stop screw)
- Incorrect throttle cable free play
- Flooded carburetor

ELECTRICAL SYSTEMS

Battery

- Faulty battery
- Discharged battery

Spark plugs

- Incorrect spark plug gap
- Incorrect spark plug heat range
- Fouled spark plug
- Worn or damaged electrode
- Worn or damaged insulator
- Faulty spark plug cap

Ignition coils

- Broken or shorted primary or secondary coils
- Faulty spark plug lead
- Damaged ignition coil

Ignition system

- Faulty ignition unit
- Faulty pickup coil

EAS00848

POOR MEDIUM-AND-HIGH-SPEED PERFORMANCE

Refer to "STARTING PROBLEMS".

ENGINE

Air filter

- Clogged air filter element

FUEL SYSTEM

Carburetors

- Faulty diaphragm
- Incorrect fuel level
- Loose or clogged main jet

EAS00850

FAULTY GEAR SHIFTING

SHIFTING IS DIFFICULT

Refer to "CLUTCH DRAGS".

SHIFT PEDAL DOES NOT MOVE

Shift shaft

- Incorrectly adjusted shift rod
- Bent shift shaft

Shift drum and shift forks

- Foreign object in a shift drum groove
- Seized shift fork
- Bent shift fork guide bar

Transmission

- Seized transmission gear
- Foreign object between transmission gears
- Incorrectly assembled transmission

JUMPS OUT OF GEAR

Shift shaft

- Incorrect shift pedal position
- Incorrectly returned stopper lever

Shift forks

- Worn shift fork

Shift drum

- Incorrect axial play
- Worn shift drum groove

Transmission

- Worn gear dog

EAS00852

FAULTY CLUTCH

CLUTCH SLIPS

Clutch

- Improperly assembled clutch
- Improperly assembled clutch master cylinder
- Improperly assembled clutch release cylinder
- Loose or fatigued clutch spring
- Loose union bolt
- Worn friction plate
- Worn clutch plate
- Damaged clutch release cylinder

Engine oil

- Incorrect oil level
- Incorrect oil viscosity (low)
- Deteriorated oil

CLUTCH DRAGS

Clutch

- Unevenly tensioned clutch springs
- Warped pressure plate
- Bent clutch plate
- Swollen friction plate
- Bent clutch pull rod
- Damaged clutch boss
- Burnt primary driven gear bushing
- Damaged clutch release cylinder
- Match marks not aligned

Engine oil

- Incorrect oil level
- Incorrect oil viscosity (high)
- Deteriorated oil

EAS00854

OVERHEATING

ENGINE

Cylinder head(-s) and piston(-s)

- Heavy carbon buildup

Engine oil

- Incorrect oil level
- Incorrect oil viscosity
- Inferior oil quality

FUEL SYSTEM

Carburetors

- Incorrect main jet setting
- Incorrect fuel level
- Damaged or loose carburetor joint

Air filter

- Clogged air filter element

CHASSIS

Brakes

- Dragging brake

ELECTRICAL SYSTEMS

Spark plugs

- Incorrect spark plug gap
- Incorrect spark plug heat range

Ignition system

- Faulty ignitor unit

EAS00857

POOR BRAKING PERFORMANCE

- Worn brake pad
- Worn brake disc
- Air in hydraulic brake system
- Leaking brake fluid
- Faulty brake caliper piston seal
- Loose union bolt
- Damaged brake hose
- Oil or grease on the brake disc
- Oil or grease on the brake pad
- Incorrect brake fluid level

EAS00860

FAULTY FRONT FORK LEGS

LEAKING OIL

- Bent, damaged or rusty inner tube
- Damaged outer tube
- Incorrectly installed oil seal
- Damaged oil seal lip
- Incorrect oil level (high)
- Loose damper rod assembly bolt
- Damaged damper rod assembly bolt copper washer
- Damaged cap bolt O-ring

MALFUNCTION

- Bent or damaged inner tube
- Bent or damaged outer tube
- Damaged fork spring
- Worn or damaged outer tube busing
- Bent or damaged damper rod
- Incorrect oil viscosity
- Incorrect oil level

EAS00862

UNSTABLE HANDLING

Handlebar

- Bent or incorrectly installed right handlebar
- Bent or incorrectly installed left handlebar

Steering head components

- Incorrectly installed upper bracket
- Incorrectly installed lower bracket (incorrectly tightened ring nut)
- Bent steering stem
- Damaged ball bearing or bearing race

Front fork legs

- Unevenoil levels (both front fork legs)
- Unevenly tensioned fork spring (both front fork legs)
- Damaged fork spring
- Bent or damaged inner tube
- Bent or damaged outer tube

Swingarm

- Worn bearing or bushing
- Bent or damaged swingarm

Rear shock absorber assembly

- Faulty rear shock absorber spring
- Leaking oil or gas

Tires

- Uneven tire pressures (front and rear)
- Incorrect tire pressure
- Uneven tire wear

Wheels

- Incorrect wheel balance
- Deformed cast wheel
- Damaged wheel bearing
- Bent or loose wheel axle
- Excessive wheel runout

Frame

- Bent frame
- Damaged steering head pipe
- Incorrectly installed bearing race

EAS00866

FAULTY LIGHTING AND SIGNALING SYSTEMS

HEADLIGHT DOES NOT LIGHT
- Wrong headlight bulb
- Too many electrical accessories
- Hard charging
- Incorrect connection
- Incorrectly grounded circuit
- Poor contacts (main or light switch)
- Burnt-out headlight bulb

HEADLIGHT BULB BURNT OUT
- Wrong headlight bulb
- Faulty battery
- Faulty rectifier/regulator
- Incorrectly grounded circuit
- Faulty main switch
- Faulty light switch
- Headlight bulb life expired

TAIL/BRAKE LIGHT DOES NOT LIGHT
- Wrong tail/brake light bulb
- Too may electrical accessories
- Incorrect connection
- Burnt-out tail/brake light bulb

TAIL/BRAKE LIGHT BULB BURNT OUT
- Wrong tail/brake light bulb
- Faulty battery
- Incorrectly adjusted rear brake light switch
- Tail/brake light bulb life expired

TURN SIGNAL DOES NOT LIGHT
- Faulty turn signal switch
- Faulty turn signal relay
- Burnt-out turn signal bulb
- Incorrect connection
- Damaged or faulty wire harness
- Incorrectly grounded circuit
- Faulty battery
- Blown, damaged or incorrect fuse

TURN SIGNAL BLINKS SLOWLY
- Faulty turn signal relay
- Faulty main switch
- Faulty turn signal switch
- Wrong turn signal bulb

TURN SIGNAL REMAINS LIT
- Faulty turn signal relay
- Burnt-out-turn signal bulb

TURN SIGNAL BLINKS QUICKLY
- Incorrect turn signal bulb
- Faulty turn signal relay
- Burnt-out turn signal bulb

HORN DOES NOT SOUND
- Incorrectly adjusted horn
- Damaged or faulty horn
- Faulty main switch
- Faulty horn switch
- Faulty battery
- Blown, damaged or incorrect fuse
- Faulty wire harness

XJR1300’99 WIRING DIAGRAM for EUR

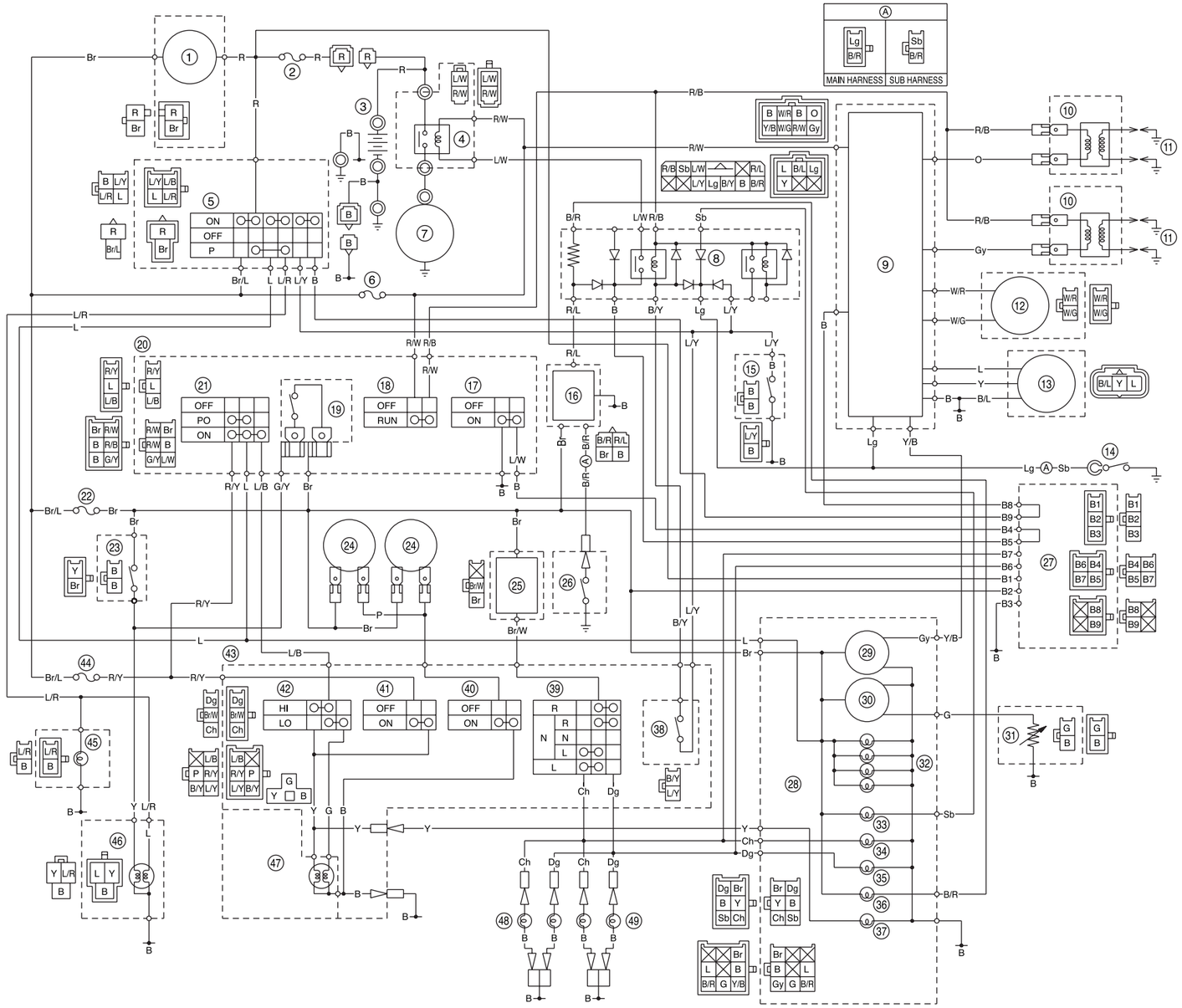

① AC generator
② Fuse (main)
③ Battery
④ Starter relay
⑤ Main switch
⑥ Fuse (ignition)
⑦ Starter motor
⑧ Starting circuit cut-off relay
⑨ Ignitor unit
⑩ Ignition coil
⑪ Spark plug
⑫ Pickup coil
⑬ TPS (throttle position sensor)
⑭ Neutral switch
⑮ Sidestand switch
⑯ Oil level relay
⑰ Start switch
⑱ Engine stop switch
⑲ Front brake switch
⑳ Handlebar switches (right)
㉑ Lights switch
㉒ Fuse (signal)
㉓ Rear brake switch
㉔ Horn
㉕ Flasher relay
㉖ Oil level switch
㉗ Connector
㉘ Meter assembly
㉙ Tachometer
㉚ Fuse gauge
㉛ Fuel sender
㉜ Meter lights
㉝ Neutral indicator light
㉞ Turn signal indicator light (left)
㉟ Turn signal indicator light (right)
㊱ Oil warning light
㊲ High beam indicator light
㊳ Clutch switch
㊴ Turn signal switch
㊵ Horn switch
㊶ Pass switch
㊷ Dimmer switch
㊸ Handlebar switch (left)
㊹ Fuse (headlight)
㊺ Auxiliary light
㊻ Tail/brake light
㊼ Headlight
㊽ Front turn signal lights
㊾ Rear turn signal lights

COLOR CODE

B	Black	O	Orange	Br/L	Brown/Blue	R/L	Red/Blue
Br	Brown	Sb	Sky blue	Br/W	Brown/White	R/W	Red/White
Ch	Chocolate	P	Pink	G/Y	Green/Yellow	R/Y	Red/Yellow
Dg	Dark green	R	Red	L/B	Blue/Black	W/G	White/Green
G	Green	Y	Yellow	L/R	Blue/Red	W/R	White/Red
Gy	Gray	B/L	Black/Blue	L/W	Blue/White	Y/B	Yellow/Black
L	Blue	B/R	Black/Red	L/Y	Blue/Yellow		
Lg	Light green	B/Y	Black/Yellow	R/B	Red/Black		

XJR1300L WIRING DIAGRAM for AUS

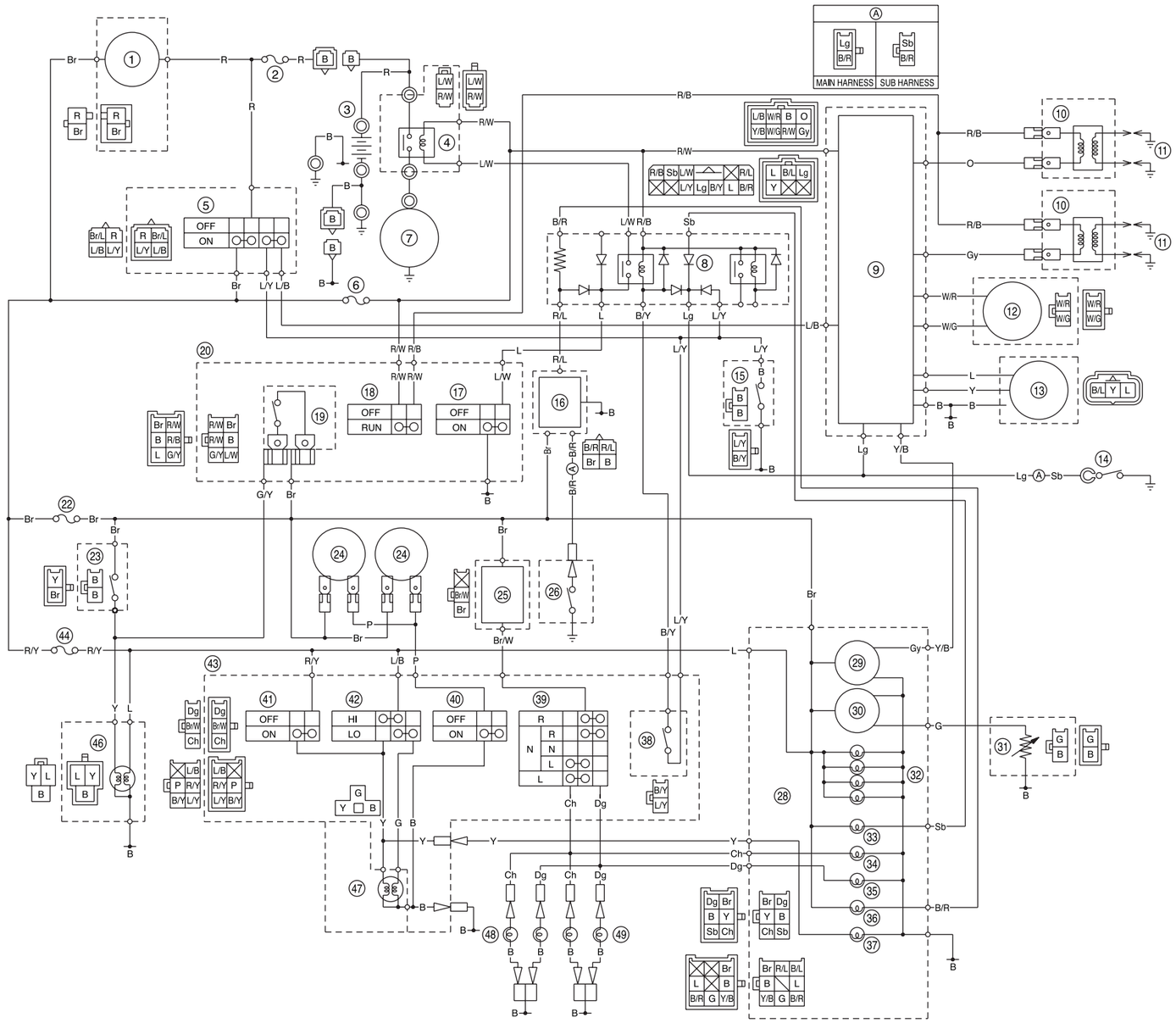

① AC generator
② Fuse (main)
③ Battery
④ Starter relay
⑤ Main switch
⑥ Fuse (ignition)
⑦ Starter motor
⑧ Starting circuit cut-off relay
⑨ Ignitor unit
⑩ Ignition coil
⑪ Spark plug
⑫ Pickup coil
⑬ TPS (throttle position sensor)
⑭ Neutral switch
⑮ Sidestand switch
⑯ Oil level relay
⑰ Start switch
⑱ Engine stop switch
⑲ Front brake switch
⑳ Handlebar switches (right)
㉒ Fuse (signal)
㉓ Rear brake switch
㉔ Horn
㉕ Flasher relay
㉖ Oil level switch
㉘ Meter assembly
㉙ Tachometer
㉚ Fuel gauge
㉛ Fuel sender
㉜ Meter lights
㉝ Neutral indicator light
㉞ Turn signal indicator light (left)
㉟ Turn signal indicator light (right)
㊱ Oil warning light
㊲ High beam indicator light
㊳ Clutch switch
㊴ Turn signal switch
㊵ Horn switch
㊶ Pass switch
㊷ Dimmer switch
㊸ Handlebar switch (left)
㊹ Fuse (headlight)
㊻ Tail/brake light
㊼ Headlight
㊽ Front turn signal lights
㊾ Rear turn signal lights

COLOR CODE

B . . . . . Black	O . . . . Orange	Br/L . . Brown/Blue	R/L . . . Red/Blue
Br . . . . Brown	Sb . . . . Sky blue	Br/W . Brown/White	R/W . . Red/White
Ch . . . Chocolate	P . . . . . Pink	G/Y . . Green/Yellow	R/Y . . . Red/Yellow
Dg . . . Dark green	R . . . . . Red	L/B . . . Blue/Black	W/G . . White/Green
G . . . . Green	Y . . . . . Yellow	L/R . . . Blue/Red	W/R . . White/Red
Gy . . . Gray	B/L . . . Black/Blue	L/W . . Blue/White	Y/B . . . Yellow/Black
L . . . . . Blue	B/R . . . Black/Red	L/Y . . . Blue/Yellow	
Lg . . . . Light green	B/Y . . . Black/Yellow	R/B . . . Red/Black	